Série AX
Chargeuse articulée

FIN: Valable à partir du W09P85296FBA08807...

Manuel d'entretien
Mise à jour: 16/07/2015

Produit	Chargeuse articulée Série AX
FIN	à partir de W09P85296FBA08807...
Éditeur	MECALAC Baumaschinen GmbH Am Friedrichsbrunnen 2 D-24782 Büdelsdorf Tél : +49 (0)4331 351 325 Fax : +49 (0)4331 351 491 Email : info@mecalac.com www: www.mecalac.com Le document est protégé par le droit d'auteur. Tous droits réservés. Toute copie, publication, traduction ou transposition sur un support électronique sous forme lisible par une machine du document intégral ou des parties du document est interdit sans l'autorisation de MECALAC Baumaschinen GmbH. Sous réserve de modifications.
Préface	Le présent manuel d'utilisation contient toutes les indications et les remarques qui sont nécessaires pour les interventions d'entretien sur la chargeuse sur roues. Veuillez lire attentivement le manuel d'entretien avant le début des interventions et conservez-là toujours à portée de main.
Validité	Le présent Manuel d'entretien est valable uniquement avec le manuel d'utilisation du Chargeuse articulée Série AX.
Suggestions et remarques	... à propos de la présente documentation ou sur la chargeuse sur roues sont à envoyer à l'adresse mentionnée précédemment.
Dernière modification	16/07/2015

Sommaire

1 Remarques destinées au lecteur

Vous trouverez des informations sur l'utilisation du Manuel d'entretien dans ce chapitre :

1.1 Validité

Le présent manuel d'entretien contient des informations et des règles de comportement pour des interventions d'entretien sur Chargeuse articulée Série AX. Veuillez lire attentivement le manuel d'entretien avant le premier entretien. Utilisez toujours le manuel d'entretien lors des interventions d'entretien Conservez le manuel d'entretien pour le personnel spécialisé compétent de manière bien visible et toujours à portée de main. Conformément au langage courant pratiqué dans ce secteur d'activités, le présent manuel d'entretien emploie le terme de chargeuse sur roues.

Le présent Manuel d'entretien est valable uniquement avec le manuel d'utilisation du Chargeuse articulée Série AX.

Le présent manuel d'entretien s'adresse au personnel spécialisé

1.2 Illustrations

Les illustrations contenues dans ce manuel d'entretien représentent la chargeuse sur roue sous forme de schéma en partie simplifié.

1.3 Mises en relief dans le texte

Dans le présent manuel d'entetien, les informations importantes sont mises en relief par des symboles ou par des typographies particulières. Les exemples ci-après illustrent les mises en relief les plus importantes.

1.3.1 Pictogrammes

Pictogrammes utilisés

Pictogramme	Signification
	Complément d'information utile.
	Conditions qui doivent être remplies pour l'exécution d'une opération.

Pictogrammes utilisés (Suite)

Pictogramme	Signification
	Outillage ou matériel utilisé pour exécuter une opération.

1.3.2 Considérations relatives à la sécurité

Consigne de sécurité: Remarque spéciale pour un chapitre informatif.

Explication sur les consignes.

- Le point indique des mesures tenant compte de ces consignes.

1.3.3 Consigne de sécurité

CONSIGNE DE SÉCURITÉ

Pour une exécution sûre, respectez strictement les étapes de travail suivantes:

1. Première opération d'une consigne de sécurité
   ! Remarque importante sur cette opération.
2. Deuxième opération d'une consigne de sécurité
   ↳ Résultat de cette opération.

✓ La consigne de sécurité est terminée, le but de cette consigne est atteint.

1.3.4 Consignes d'avertissement

DANGER

Risque de blessures mortelles.
Le non-respect de cet avertissement peut entraîner des blessures très graves, voire mortelles.
➔ La flèche indique une mesure de protection que vous devez impérativement mettre en place pour prévenir ce risque.

AVERTISSEMENT

Risque de blessures graves.
Le non-respect de cet avertissement peut entraîner des blessures graves, voire mortelles.
➔ La flèche indique une mesure de protection que vous devez impérativement mettre en place pour prévenir ce risque.

ATTENTION

Risque de blessures.
Le non-respect de cet avertissement peut entraîner des blessures corporelles.
➔ La flèche indique une mesure de protection que vous devez impérativement mettre en place pour prévenir ce risque.

AVIS

Risque de dommages matériels.
Le non-respect de cet avertissement peut entraîner des dommages considérables pour la machine ou son environnement.
➔ La flèche indique une mesure de protection que vous devez impérativement mettre en place pour prévenir ce risque.

1.3.5 Instruction opérationnelle

Effectuez les opérations suivantes : = début d'une instruction de travail

1. Première opération d'un mode opératoire.
`Réglages obligatoires . . . . . .` **`Valeurs de réglage`**

2. Deuxième opération d'un mode opératoire.
➥ Résultat de cette opération.

✓ L'opération est terminée, le but est atteint.

2 Description

Vous trouverez des informations complémentaires sur les pièces de la chargeuse sur roues dans ce chapitre qui ne sont pas fournies dans le manuel d'utiliation.

- Pièces de la chargeuse sur roues (page 9)
- Appareil de diagnostic (page 18)

2.1 Pièces de la chargeuse sur roues

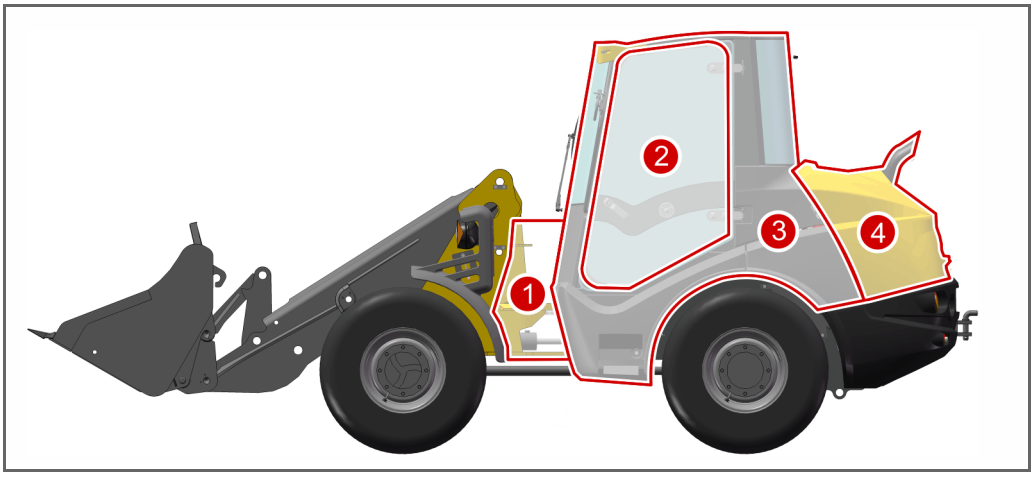

Vue d'ensemble des pièces de la chargeuse sur roues

Légende

N°	Désignation	Fonction
1	Train avant	Voir le chapitre „Train avant“ (page 10)
2	Intérieur de la cabine	Voir le chapitre „Intérieur de la cabine“ (page 11)
3	Extérieur de la cabine	Voir le chapitre „Extérieur de la cabine“ (page 14)
4	Compartiment moteur	Voir le chapitre „Compartiment moteur“ (page 17)

2.2 Train avant

Le bras du godet et les vannes nécessaires à la commande du vérin hydraulique se trouvent sur le train avant. Les vannes sont actionnées par commande hydraulique ou électrique. En raison de la conception mécanique de la chargeuse articulée, les conduites d'alimentation et de commande de l'articulation sont soumises à des sollicitations mécaniques élevées. Il faut tenir compte que les conduites sont respectivement fixées sur le train avant et arrière. Les conduites entre les points de fixation doivent êtrre libres de se déplacer lors d'une manœuvre sans toucher les autres composants.

2.2.1 Vue d'ensemble

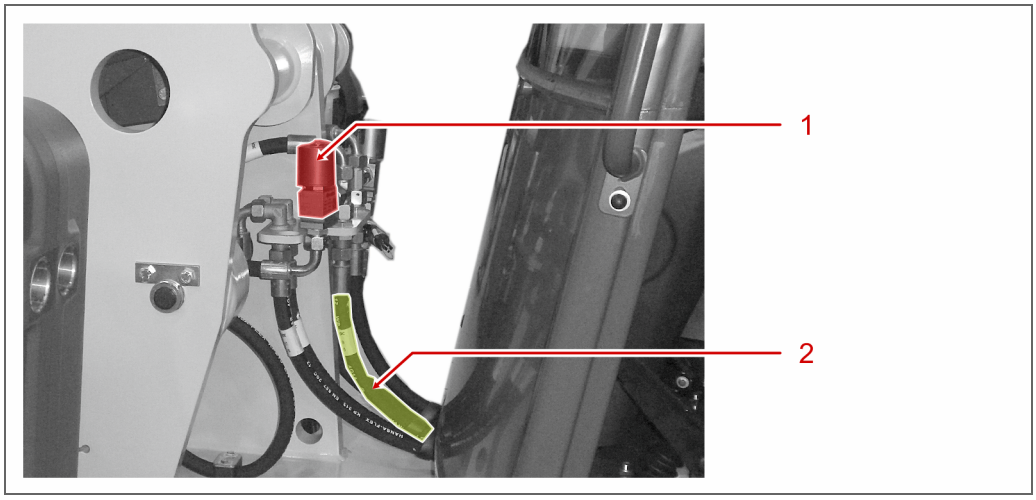

Vue d'ensemble – Train avant | Tuyaux hydrauliques et vannes

Légende

N°	Désignation	Fonction
1	Vannes	Elles assurent la commande du vérin hydraulique.
2	Tuyaux hydrauliques	Voir le chapitre „Tuyaux hydrauliques“ (page 10)

2.2.2 Tuyaux hydrauliques

Il faut contrôler les tuyauteries hydrauliques conformément à l'intervalle de révision. Des remarques détaillées à ce sujet se trouvent dans la BGR 237.

Une recommandation pour l'intervalle de remplacement a été établie en référence à la norme DN 20066.

Les intervalles de remplacement indiquées peuvent se prolonger en fonction des spécifications des tuyaux. L'intervalle de remplacememnet incombe à l'exploitant.

Description des intervalles de remplacement des tuyaux hydrauliques

Spécifications du tuyau hydraulique	Intervalle de remplacement recommandé
Spécification normale	6 ans durée de service (avec une durée de stockage de maximum 2 ans)

Description des intervalles de remplacement des tuyaux hydrauliques (Suite)

Spécifications du tuyau hydraulique	Intervalle de remplacement recommandé
Spécifications accrues : • durées d'utilisation accrues, par exemple plusieurs équipes de travail ou cycles courts de la machine, particulièrement les impulsions de pression, • fortes influences extérieures et intérieures (par le fluide) qui réduisent fortement la durée d'utilisation du tuyau hydraulique. • Outillage manuel hydraulique, par exemple, ciseaux mobiles dans les ferrailles.	2 ans (durée de service)

2.3 Intérieur de la cabine

2.3.1 Combiné multifonction

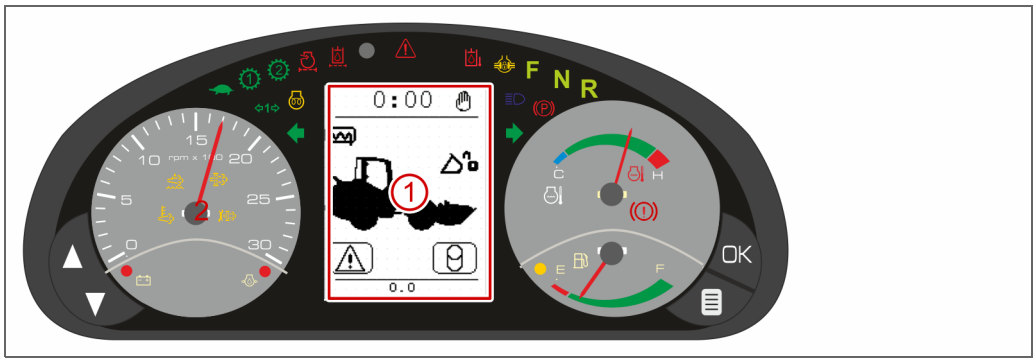

Combiné multifonction

Légende

N°	Désignation	Fonction
1	Écran	Voir le chapitre „Écran“ (page 11)

2.3.2 Écran

2.3.2.1 Vue d'ensemble

La nouvelle série AX a développé la fonction d'unité d'affichage (écran). Les nouveaux composants sont équipés d'un affichage de messages CAN-Bus s'ajoutant aux paramètres de service connus. En règle générale, ce sont des messages de de´fauts provenant de la commande du véhicule. La signification respective des messages de défauts est décrite à la section „Messages de défauts“ (page 19). Un message de défaut s'affiche sur l'écran uniquement au moment où la cause est active.

2.3.2.2 Réglages de l'écran

Le diagramme ci-après schématise comme les divers modes d'affichage et les réglages sont exécurtés directment sur les composants. La commande de l'écran est décrite dans le manuel d'utilisation.

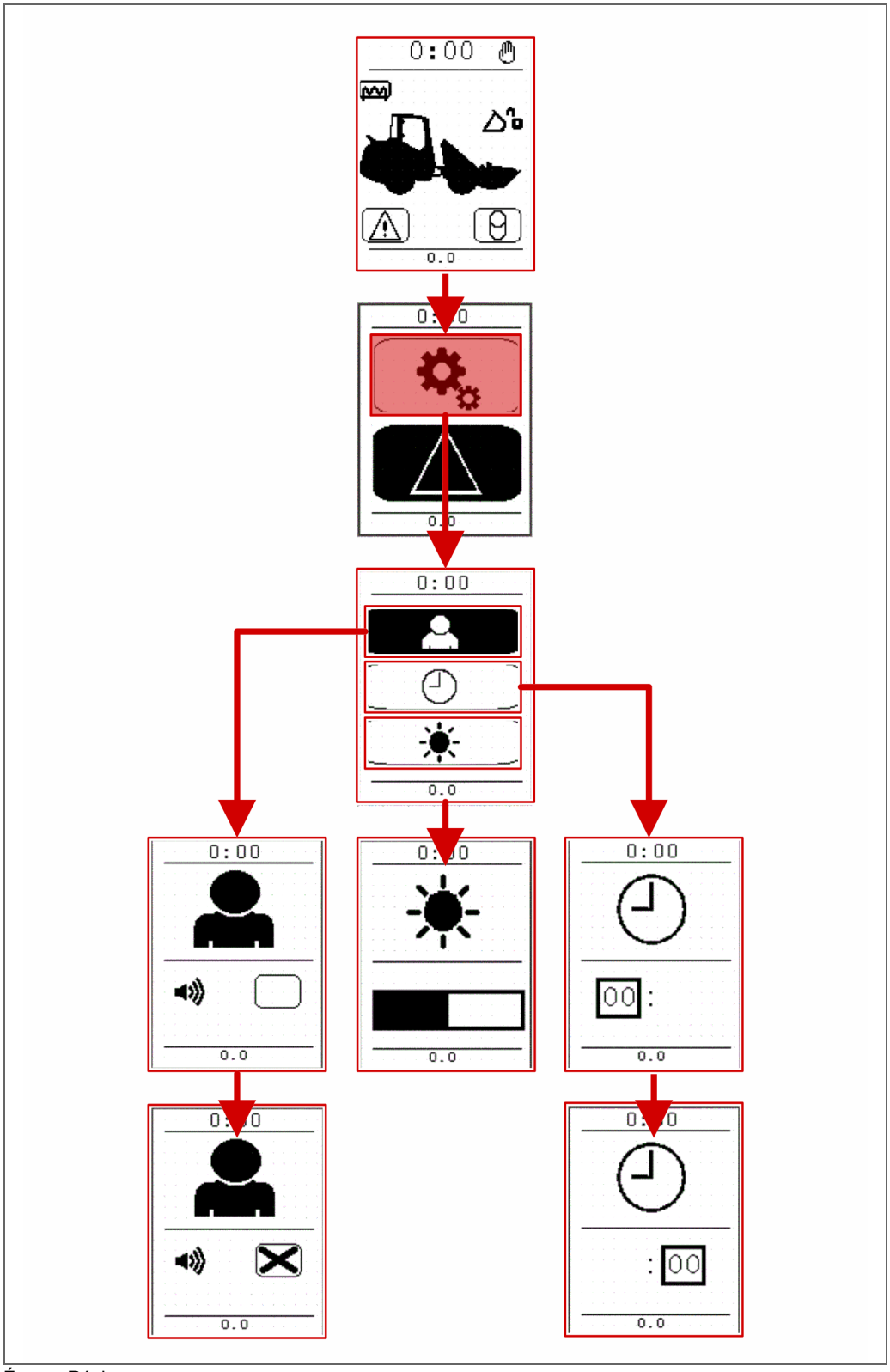

Écran - Réglages

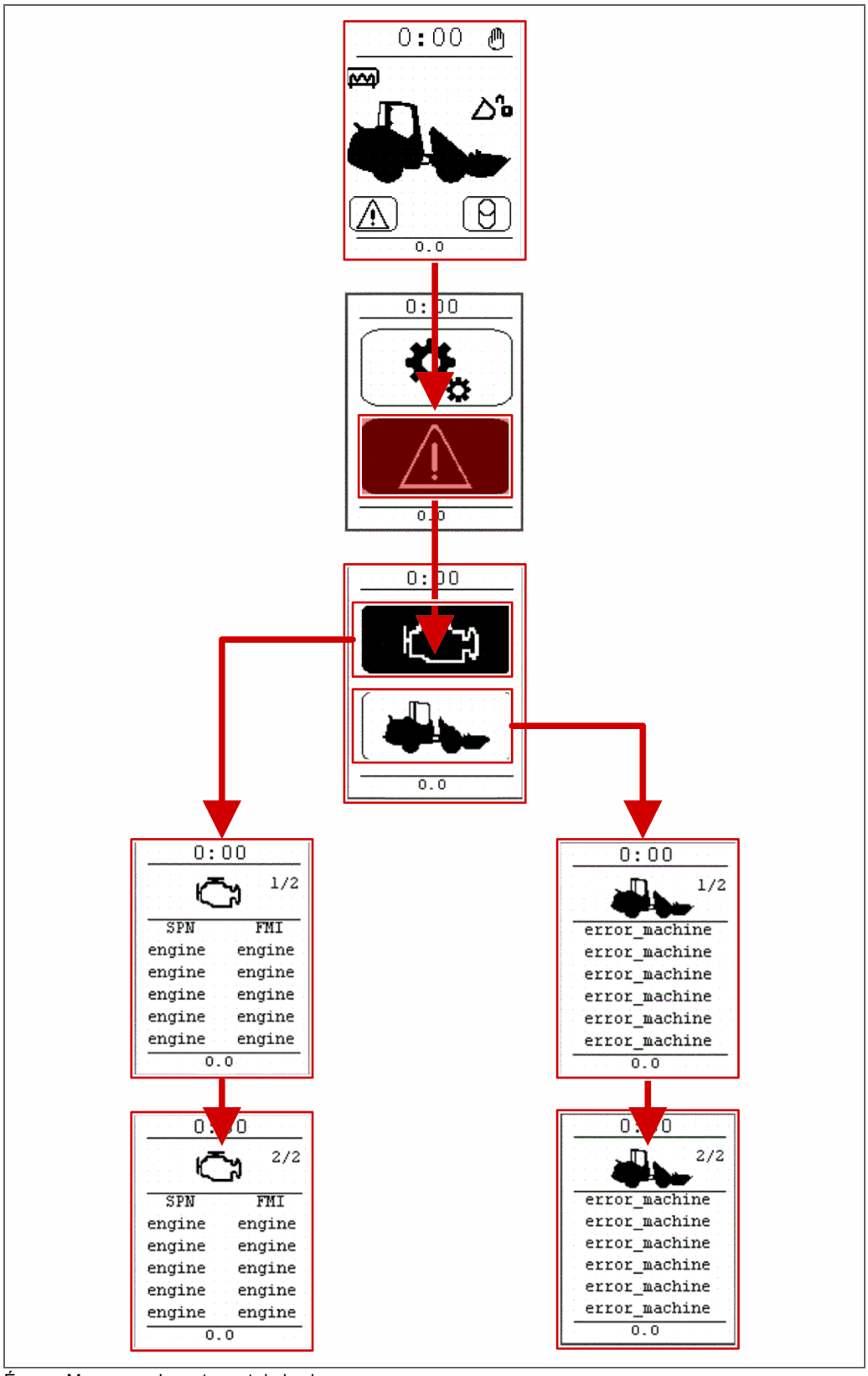

Écran - Messages du moteur et de la chargeuse sur pneus

2.4 Extérieur de la cabine

2.4.1 Vue d'ensemble

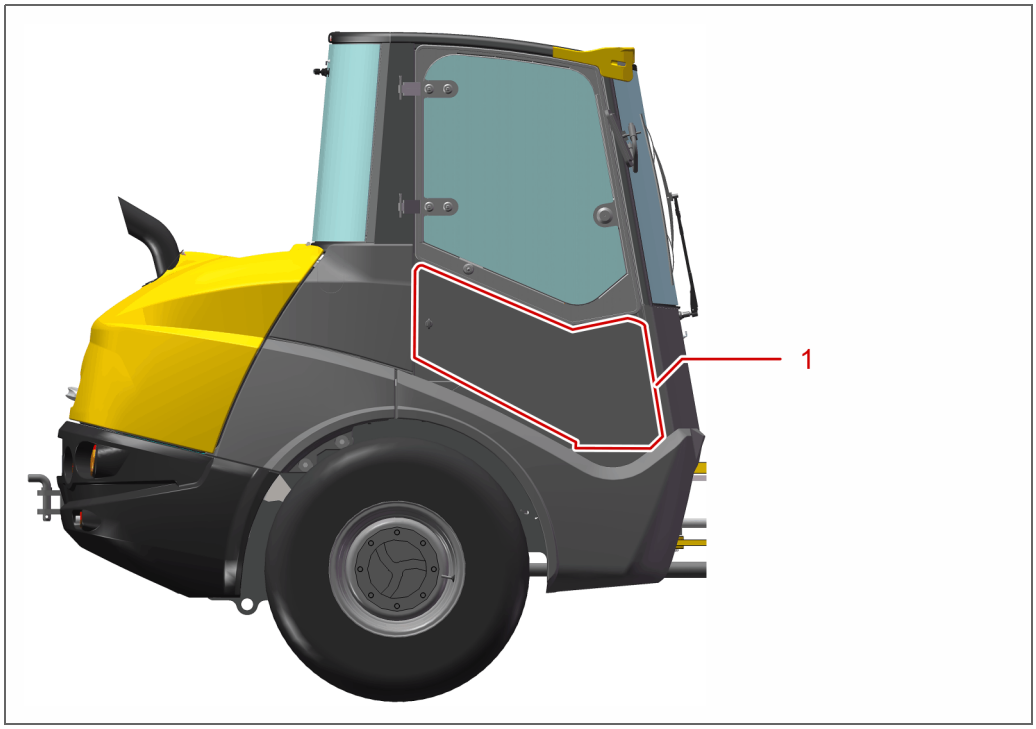

Extérieur de la cabine | Vue latérale droite

Légende

N°	Désignation	Fonction
1	Électrique centralisée	Voir le chapitre „Électrique centralisée“ (page 15)

2.4.2 Électrique centralisée

L'application des directives exigées d'émissions des gaz d'échappement relative à la norme Tier, introduite pour le segments de produits de la série AX, a engendré une nouvelle génération de commande de véhicules. La régulation électronique, en soi évidente, dans la construction automobile actuelle du moteur d'entraînement en vue d'obtenir les valeurs de gaz d'échappement requises, a été complétée par la commande électronique de la fonction hydraulique de conduite dans cette phase de développement. De plus, la communication des signaux de commande a été optimisée par l'implémentation d'un système CAN-Bus entre les unités de commande du véhicule.

2.4.2.1 Vue d'ensemble

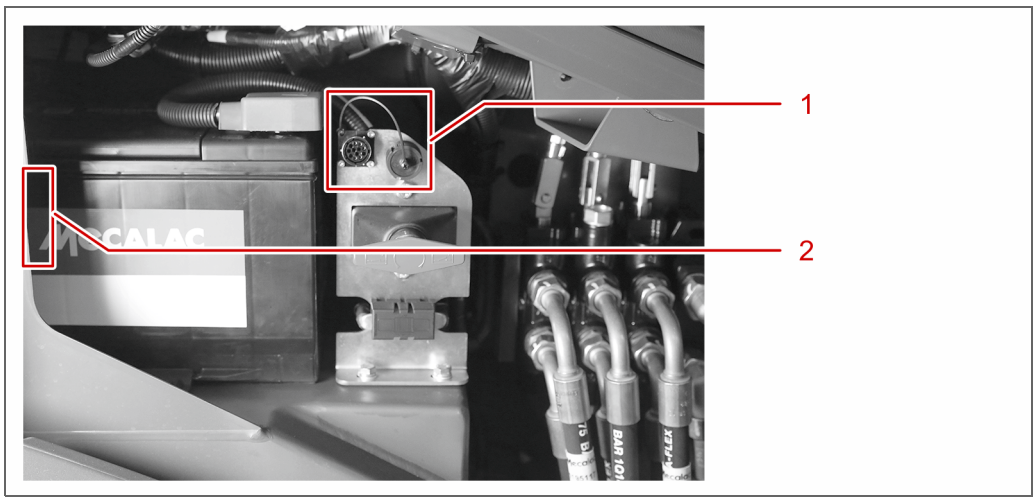

Vue d'ensemble de l'électrique centralisée

Légende

N°	Désignation	Fonction
1	Interface de diagnostic - Commande du véhicule	Voir la section „Interface de diagnostic - Commande du véhicule“ (page 16).
2	Emplacement des commandes	Voir la section „Emplacement des commandes“ (page 16).

2.4.2.2 Interface de diagnostic - Commande du véhicule

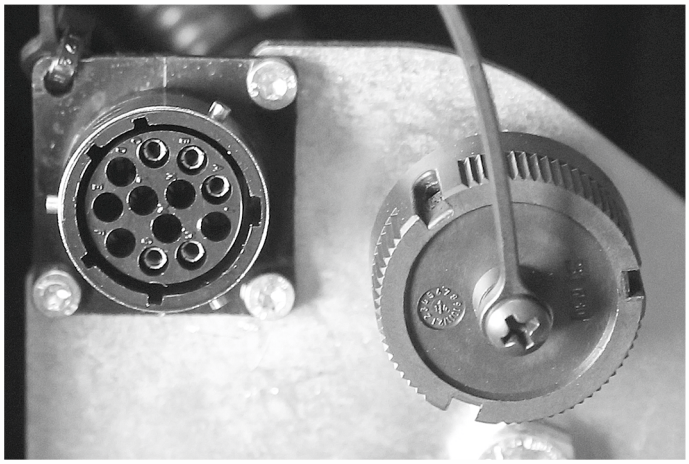

Interface de diagnostic - Commande du véhicule

L'appareil de diagnostic est raccordé à l'interface de diagnostic de la commande du véhicule. Vous trouverez des informations complémentaires sur le comparateru à la section Appareil de diagnostic (page 18).

2.4.2.3 Emplacement des commandes

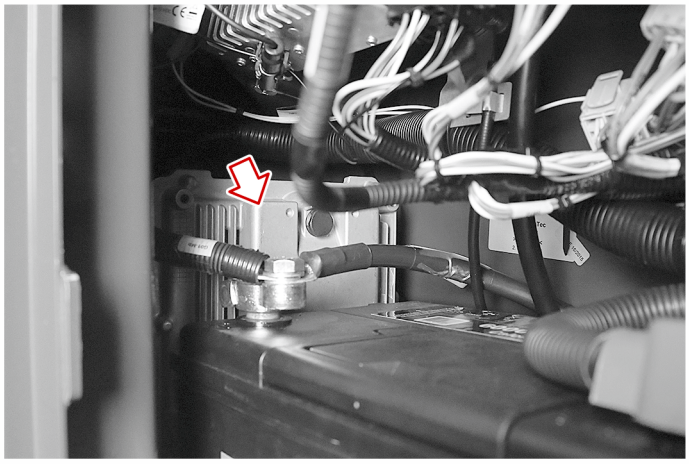

Emplacement des commandes

2.5 Compartiment moteur

2.5.1 Vue d'ensemble

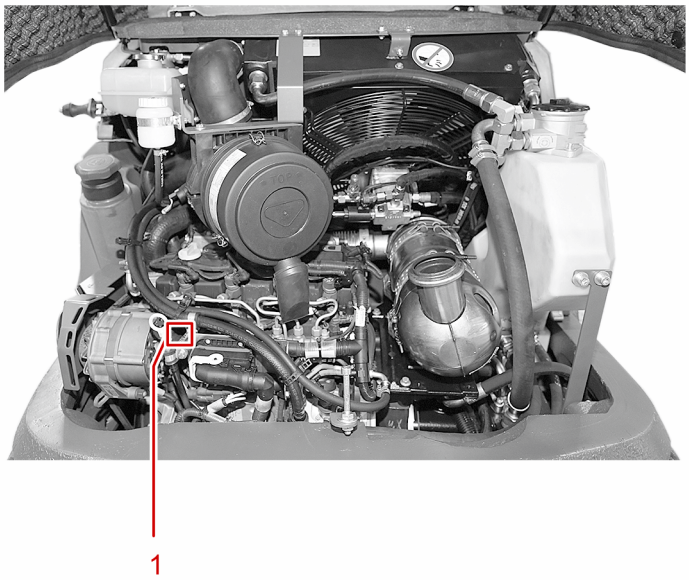

Vue d'ensemble de l'intérieur de la cabine

Légende

N°	Désignation	Fonction
1	Interface de diagnostic - Commande du moteur	Voir paragraphe Interface de diagnostic - Commande du moteur (page 17).

2.5.2 Interface de diagnostic - Commande du moteur

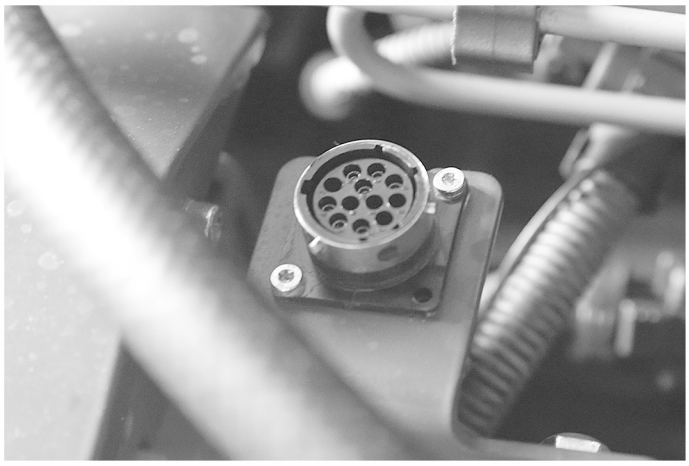

Interface de diagnostic - Commande du moteur

L'appareil de diagnostic est raccordé à l'interface de diagnostic de la commande du moteur. Vous trouverez des informations complémentaires sur le comparateru à la section Appareil de diagnostic (page 18).

2.6 Appareil de diagnostic

2.6.1 Vue d'ensemble

L'appareil de diagnostic sert de lecteur pour lire et visualiser les données du moteur et du véhicule depuis le système CAN-Bus. Par ailleurs, des messages de défauts mémorisés supplémentaires peuvent être lus et réinitialisés. La liste des messages de défauts sont consutlables à la section Messages de défauts (page 19).

Les défauts actifs sont affichés à l'écran. Par ailleurs, ces défauts sont sauvegardés dans la mémoire de travail du contrôleur. Dans le cadre de la révision réccurente, les mémoirs de défaut ssont lues et analysées.

Lorsque le traitement des défauts est terminé, la mémoire des défauts est supprimée (RAZ).

L'interface de diagnostic de la commande moteur et celle de la commande du véhicule autorisent divers appareils de diagnostic.

Appareil de diagnostic

2.6.2 Messages de défauts

Les messages des contrôleurs qui s'affichent à l'écran sont énumérés dans le tableau suivant. A l'aide de ces informations et d'un multimètre disponible dans le commerce, il vous est possible d'identifier les causes des défauts et de contrôler la fonction des composants électriques avec des "moyens du bord".

Des défauts provenant de la commande moteur se base sur un protocole SAE J1939 obligatoire. Ils ont utilisés par différents fabricants internationaux.

La liste de l'ensemble des messages depuis le contrôleur moteur "U05" se trouvent en annexe du présent manuel d'entretien (voir page 79: Annexe).

Des messages provenant de la commande de conduite sont générées en tant que "Messages M" (Mecalac). Ils sont visibles à l'écran comme les messages du moteur (s'ils sont actifs).

Messages provenant de la commande de conduite

Défaut	Signification	Remède
M001	Défaut vanne Tortue Y01	Vérifier la vanne Y01, vérifier le câble 1009.
M002	Défaut vanne Blocage de différentiel	Vérifier la vanne Y055, vérifier le câble 1003.
M003	Défaut Capteur d'huile de température	Vérifier le capteur P06, vérifier les câbles 1015 et GND_S2_U01
M004	Défaut vanne Dispositif d'attache rapide	Vérifier la vanne Y16, vérifier le câble 1003.
M005	Défaut vannes Moteur de traction	Vérifier les vannes Y33, Y34, Y37, vérifier les câbles 1008, 1007, 1024
M006	Défaut vanne Clapet de sécurité	Vérifier les vannes Y52a, Y52b, vérifier les câbles 1004, 1005
M007	Défaut signal Pédale d'approche lente	-
M008	Défaut signal Accélérateur à main	Vérifier le potentiomètre JS05, vérifier le câble 1026.
M009	Défaut signal Pédale d'accélération	Vérifier la pédale d'accélération, vérifier les câbles 1016, 1017
M010	Défaut communication Moteur	Vérifier les câbles CAN1-H, CAN1-L, vérifier le contact sur la commande U06 et le contrôleur moteur U05
M011	Défaut communication Contrôleur	Vérifier les câbles CAN1-H, CAN1-L, vérifier le contact sur la commande U06 et le contrôleur moteur U05
M012	Défaut commande lave-glace	Vérifier le relais K02, vérifier le câble 6003
M013	Défaut commande Option 3	Vérifier le relais K01, vérifier le câble 6015
M014	Défaut commande Option 4	Vérifier le relais K05, vérifier le câble 6016

Messages provenant de la commande de conduite (Suite)

Défaut	Signification	Remède
M015	Défaut commande relais K14 (Kl.50)	Vérifier le relais K14, vérifier le câble 6009

3 Opérations d'entretien

Vous trouverez des informations sur les opérations d'entretien dans ce chapitre.

3.1 Opérations de contrôle

3.1.1 Contrôle du niveau d'huile du pont avant

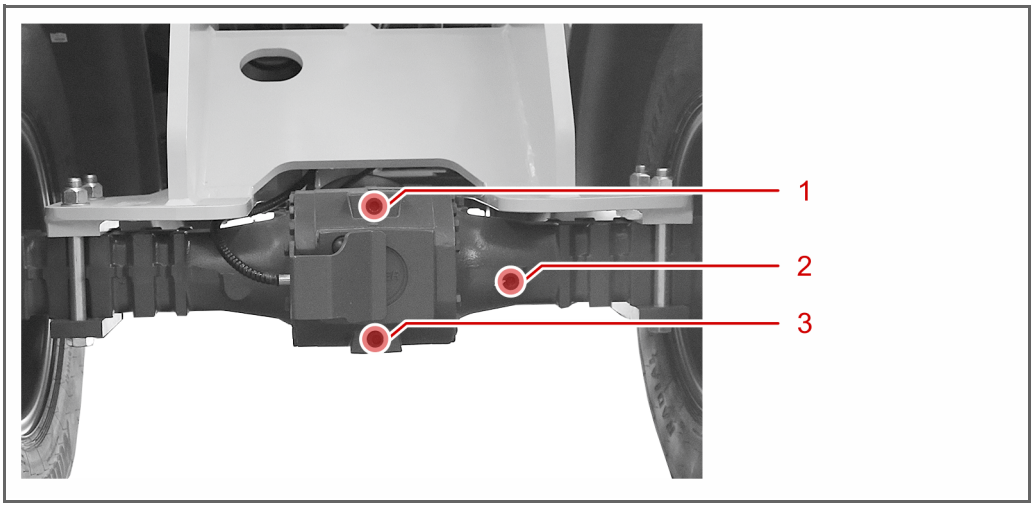

Emplacement des vis sur le pont avant

Légende

N°	Désignation
1	Vis de remplissage
2	Vis de contrôle
3	Vis de purge

Condition :

- La chargeuse sur roues est préchauffée.
- La chargeuse sur roue se trouve sur une surface horizontale.
- La chargeuse sur roues est hors service.
- Le frein de parking est serré.
- La clé de contact est retirée.

Matériel nécessaire :

- Clé à six pans creux avec une ouverture de 12
- Réservoir collecteur d'huile
- Gants de protection
- Nouvelle huile de transmission adéquate si besoin est

AVERTISSEMENT

Risque pour la santé lié à l'huile de transmission !

L'huile de transmission est dangereuse pour la santé. Il existe un risque de cancer de la peau au contact répété avec l'huile de transmission.

➔ Éviter le contact cutané prolongé avec l'huile de transmission.
➔ Lors des travaux, portez toujours des gants de protection.

AVIS

Risque pour l'environnement lié à l'huile de transmission !

L'huile de transmission utilisée pour la chargeuse sur roues est dangereuse pour l'environnement !

➔ Éliminez l'huile de transmission utilisée en vous conformant à la réglementation en matière d'élimination des déchets locale en vigueur.
➔ Récupérez l'huile de transmission déversée dans des récipients adéquats.
➔ Évitez que l'huile de transmission ne se répande sur le sol.

Effectuez les opérations suivantes :

1. Placez un réservoir collecteur d'huile sous le pont avant.
   ➥ Ce réservoir empêche l'huile de transmission de pénétrer dans le sol.

2. Desserrez la vis de contrôle avec une clé à six pans creux.

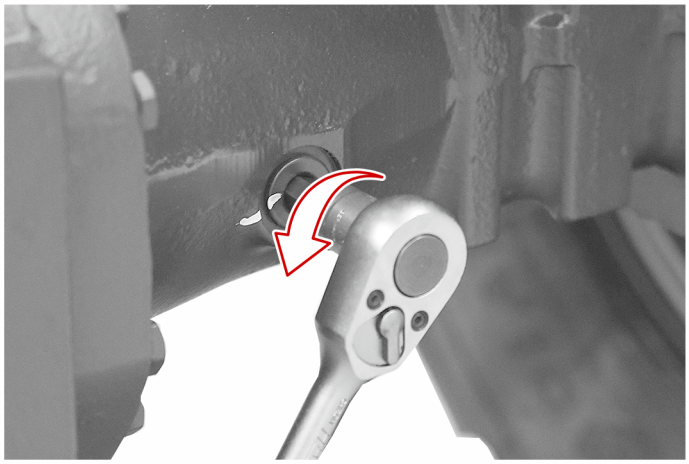

3. Récupérez immédiatement l'huile de transmission éventuellement déversée avec le réservoir colleteur d'huile.

4. Vérifier le niveau d'huile du pont avant.

   ! Le niveau d'huile doit atteindre exactement le bord inférieur de l'orifice de contrôle

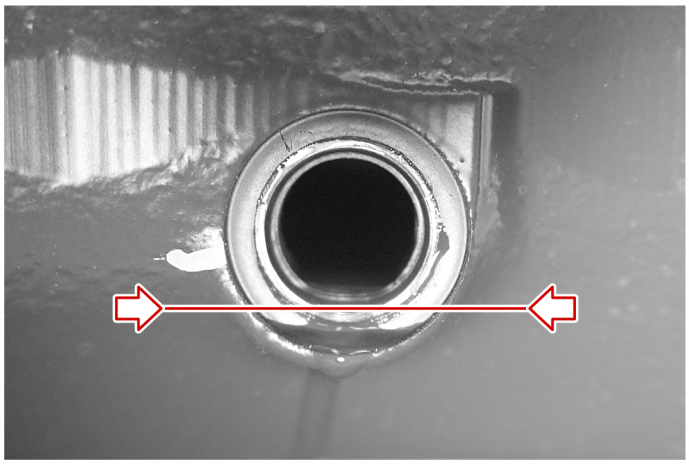

5. Complétez l'huile de transmission si nécessaire jusqu'au bord inférieur de l'orifice de contrôle.

   ! Pour compléter le niveau, vous devez desserrer la vis de remplissage.

6. Serrez à fond la vis de contrôle avec une clé à six pans creux.

7. Éliminez l'huile de transmission récupérée en vous conformant à la réglementation locale en vigueur.

✓ Terminé.

3.1.2 Contrôle du niveau d'huile du pont arrière

Condition :

- La chargeuse sur roues est préchauffée.
- La chargeuse sur roue se trouve sur une surface horizontale.
- La chargeuse sur roues est hors service.
- Le frein de parking est serré.
- La clé de contact est retirée.

Matériel nécessaire :

- Clé à six pans creux avec une ouverture de 12
- Réservoir collecteur d'huile
- Gants de protection
- Nouvelle huile de transmission adéquate si besoin est

AVERTISSEMENT

Risque pour la santé lié à l'huile de transmission !

L'huile de transmission est dangereuse pour la santé. Il existe un risque de cancer de la peau au contact répété avec l'huile de transmission.

➔ Éviter le contact cutané prolongé avec l'huile de transmission.
➔ Lors des travaux, portez toujours des gants de protection.

AVIS

Risque pour l'environnement lié à l'huile de transmission !

L'huile de transmission utilisée pour la chargeuse sur roues est dangereuse pour l'environnement !

➔ Éliminez l'huile de transmission utilisée en vous conformant à la réglementation en matière d'élimination des déchets locale en vigueur.
➔ Récupérez l'huile de transmission déversée dans des récipients adéquats.
➔ Évitez que l'huile de transmission ne se répande sur le sol.

Effectuez les opérations suivantes :

1. Placez un réservoir collecteur d'huile sous le pont arrière.
   ➥ Ce réservoir empêche l'huile de transmission de pénétrer dans le sol.

2. Desserrez la vis de contrôle avec une clé à six pans creux.

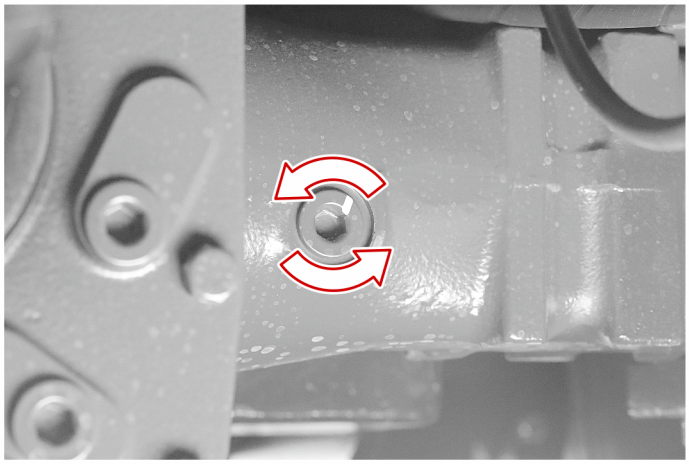

3. Récupérez immédiatement l'huile de transmission éventuellement déversée avec le réservoir colleteur d'huile.

4. Vérifier le niveau d'huile du pont arrière.

   ! Le niveau d'huile doit atteindre exactement le bord inférieur de l'orifice de contrôle

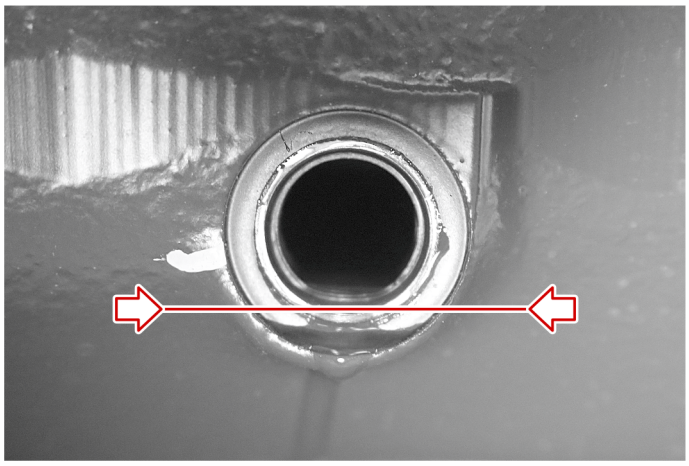

5. Complétez l'huile de transmission si nécessaire jusqu'au bord inférieur de l'orifice de contrôle.

6. Serrez à fond la vis de contrôle avec une clé à six pans creux.

7. Éliminez l'huile de transmission récupérée en vous conformant à la réglementation locale en vigueur.

✓ Terminé.

3.1.3 Contrôle du niveau d'huile de l'engrenage planétaire

Condition :

- La chargeuse sur roues est préchauffée.
- La chargeuse sur roue se trouve sur une surface horizontale.
- La chargeuse sur roues est hors service.
- Le frein de parking est serré.
- La clé de contact est retirée.

Matériel nécessaire :

- Clé à six pans creux avec une ouverture de 12
- Réservoir collecteur d'huile
- Gants de protection
- Nouvelle huile de transmission adéquate si besoin est

AVERTISSEMENT

Risque pour la santé lié à l'huile de transmission !

L'huile de transmission est dangereuse pour la santé. Il existe un risque de cancer de la peau au contact répété avec l'huile de transmission.

➔ Éviter le contact cutané prolongé avec l'huile de transmission.
➔ Lors des travaux, portez toujours des gants de protection.

AVIS

Risque pour l'environnement lié à l'huile de transmission !

L'huile de transmission utilisée pour la chargeuse sur roues est dangereuse pour l'environnement !

➔ Éliminez l'huile de transmission utilisée en vous conformant à la réglementation en matière d'élimination des déchets locale en vigueur.
➔ Récupérez l'huile de transmission déversée dans des récipients adéquats.
➔ Évitez que l'huile de transmission ne se répande sur le sol.

Effectuez les opérations suivantes :

1. Manœuvrez la chargeuse de sorte que que la ligne de remplissage `Oil Level` soit orientée horizontalement sur l'engrenage planétaire.

2. Placez un réservoir collecteur d'huile sur la jante.
   ➥ Ce réservoir empêche l'huile de transmission de pénétrer dans le sol.
3. Desserrez la vis de contrôle avec une clé à six pans creux.

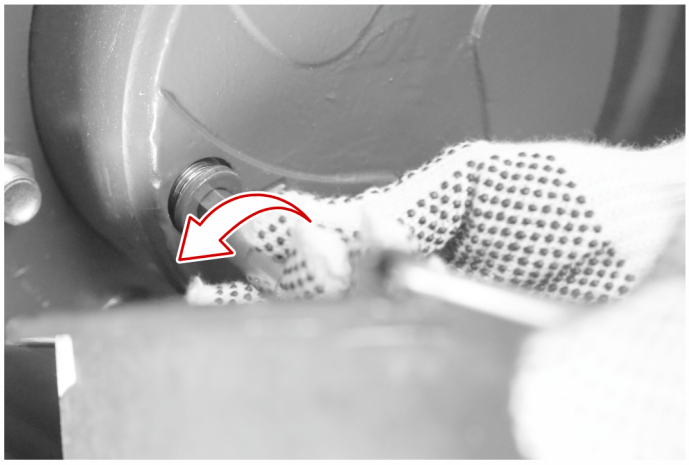

4. Récupérez immédiatement l'huile de transmission éventuellement déversée avec le réservoir colleteur d'huile.

5. Vérifier le niveau d'huile de l'engrenage planétaire.

! Le niveau d'huile doit atteindre exactement le bord inférieur de l'orifice de contrôle

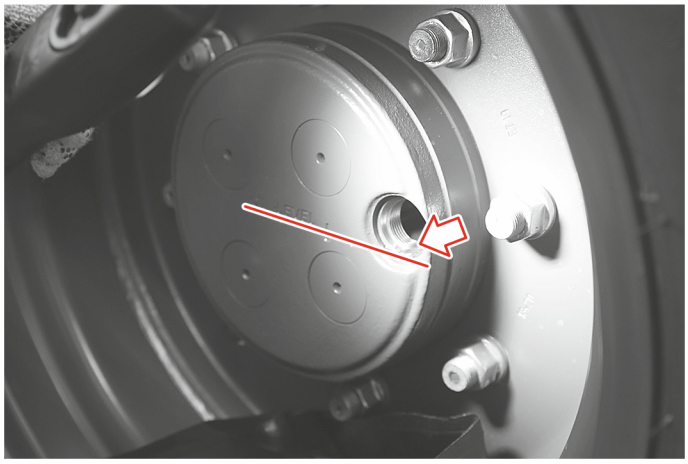

6. Complétez l'huile de transmission si nécessaire jusqu'au bord inférieur de l'orifice de contrôle.

7. Serrez à fond la vis de contrôle avec une clé à six pans creux.

8. Éliminez l'huile de transmission récupérée en vous conformant à la réglementation locale en vigueur.

✓ Terminé.

3.1.4 Contrôle du niveau du réducteur planétaire

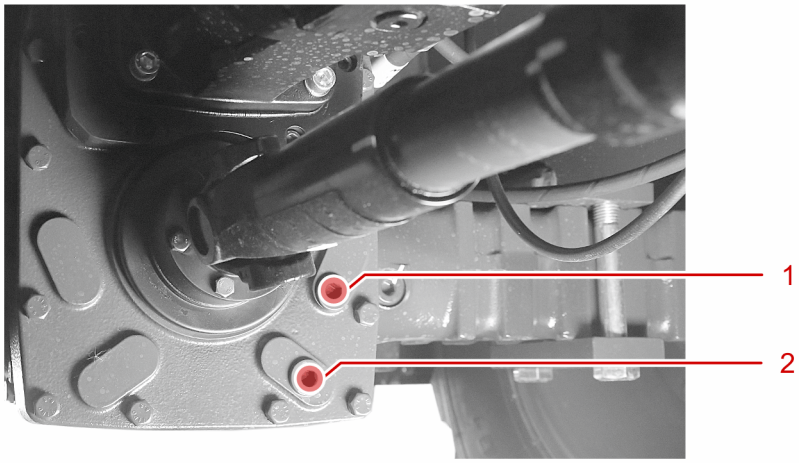

Emplacement des vis sur le réducteur planétaire

Légende

N°	Désignation
1	Vis de contrôle
2	Vis de purge

Condition :

- La chargeuse sur roues est préchauffée.
- La chargeuse sur roue se trouve sur une surface horizontale.
- La chargeuse sur roues est hors service.
- Le frein de parking est serré.
- La clé de contact est retirée.

Matériel nécessaire :

- Clé à six pans creux avec une ouverture de 12
- Réservoir collecteur d'huile
- Gants de protection
- Nouvelle huile de transmission adéquate si besoin est

AVERTISSEMENT

Risque pour la santé lié à l'huile de transmission !

L'huile de transmission est dangereuse pour la santé. Il existe un risque de cancer de la peau au contact répété avec l'huile de transmission.

➔ Éviter le contact cutané prolongé avec l'huile de transmission.
➔ Lors des travaux, portez toujours des gants de protection.

AVIS

Risque pour l'environnement lié à l'huile de transmission !

L'huile de transmission utilisée pour la chargeuse sur roues est dangereuse pour l'environnement !

➔ Éliminez l'huile de transmission utilisée en vous conformant à la réglementation en matière d'élimination des déchets locale en vigueur.
➔ Récupérez l'huile de transmission déversée dans des récipients adéquats.
➔ Évitez que l'huile de transmission ne se répande sur le sol.

Effectuez les opérations suivantes :

1. Placez un réservoir collecteur d'huile sous le réducteur planétaire.
   ➥ Ce réservoir empêche l'huile de transmission de pénétrer dans le sol.

2. Desserrez la vis de contrôle avec une clé à six pans creux.

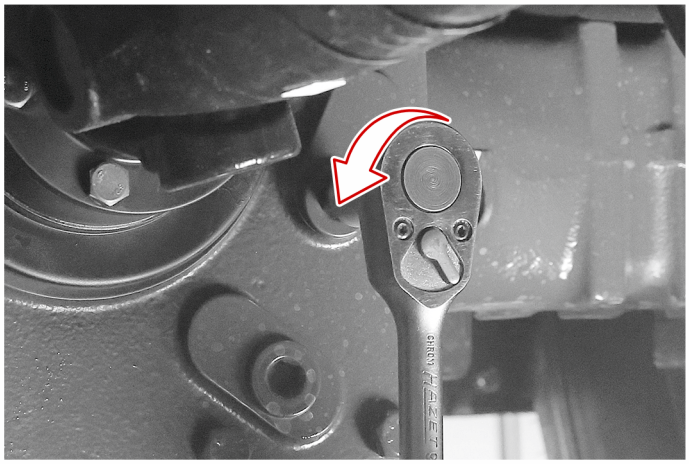

3. Récupérez immédiatement l'huile de transmission éventuellement déversée avec le réservoir colleteur d'huile.

4. Vérifier le niveau d'huile du réducteur planétaire.

! Le niveau d'huile doit atteindre exactement le bord inférieur de l'orifice de contrôle

5. Complétez l'huile de transmission si nécessaire jusqu'au bord inférieur de l'orifice de contrôle.

6. Serrez à fond la vis de contrôle avec une clé à six pans creux.

7. Éliminez l'huile de transmission récupérée en vous conformant à la réglementation locale en vigueur.

✓ Terminé.

3.1.5 Contrôler les fonctions électriques et les raccords

Effectuez les opérations suivantes :

1. Testez l'ensemble des fonctions électriques.

2. Vérifiez la bonne fixation des connecteurs électriques.
- ➥ Fusibles
- ➥ Relais

3. Procédez à un contrôle visuel des faisceaux de câbles.

! Vérifiez leur bonne fixation.

4. Mesurez la tension de la batterie.

5. Mesurez et vérifiez la fonction de l'alternateur triphasé.

6. Vérifier le bon fonctionnement du coup-batterie.

7. Vérifiez l'absence de potentiel électrique sur la carrosserie.

✓ Terminé.

3.1.6 Contrôle des tuyauteries hydrauliques

Effectuez les opérations suivantes :

1. Vérifier l'absence de fuites et de défaillances mécaniques sur l'ensemble des tuyaux hydrauliques.

   ! Des remarques détaillées à ce sujet se trouvent dans la BGR 237.

2. Remplacez immédiatement les tuyauteries défectueuses.

✓ Terminé.

Info

Le chapitre „Description“ > „Tuyaux hydrauliques“ (page 10) indique les intervalles de remplacement recommandés des tuyaux hydrauliques.

3.2 Réparations

3.2.1 Changer la roue

Condition :

- La chargeuse sur roue se trouve sur une surface horizontale.
- La chargeuse sur roues est hors service.
- Le frein de parking est serré.
- Le commutateur à bascule Direction se trouve en position Neutre.
- La clé de contact est retirée.

Matériel nécessaire :

- Deux personnes
- Un cric adapté au poids de la chargeuse sur pneus
- Un support adéquat pour le cric
- Blocs de protection
- Gants de protection
- Croisillon
- Une clé dynamométrique
- Une nouvelle roue

Démontage de la roue

ATTENTION

Risque de blessures par écrasement des membres !

Le pneu de la chargeuse est grand et lourd. Il peut vous écraser en se renversant.

➔ Toujours porter des gants de protection !
➔ Portez à tout moment des chaussures de sécurité !
➔ Intervenez toujours de manière raisonnable !
➔ Procédez toujours au changement de roue avec deux personnes

Effectuez les opérations suivantes :

1. Desserrez les huit écrous de la roue d'un demi-tour à l'aide du croisillon.

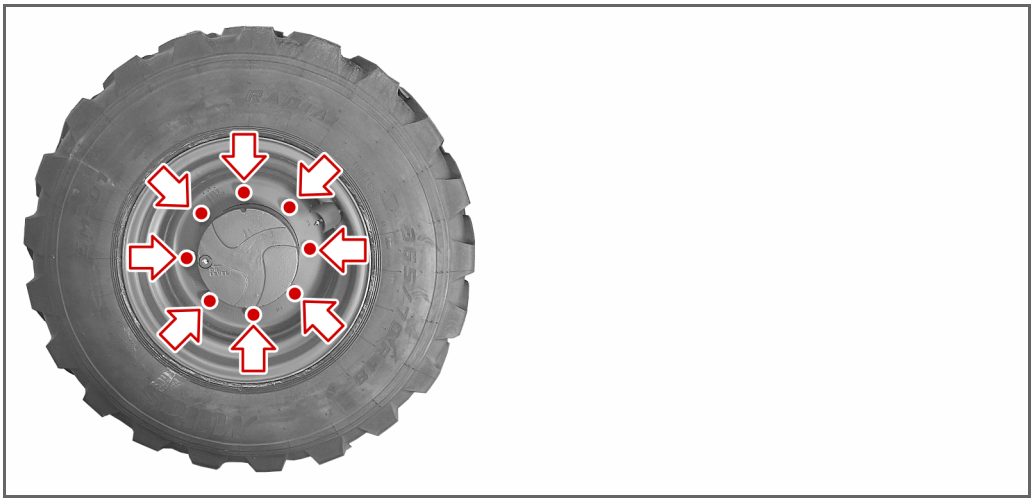

2. Positionnez un support adéquat et le cric sous le point de levage de l'essieu de roue à changer.

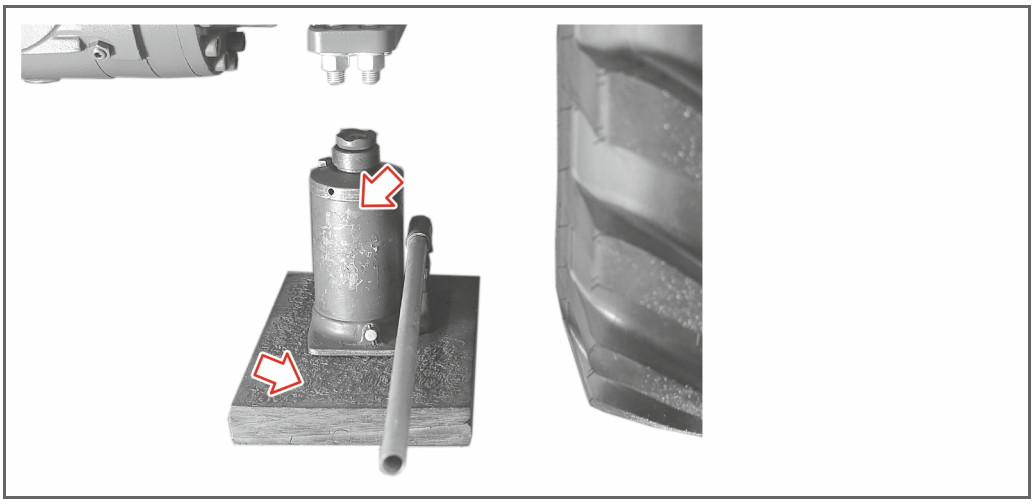

3. Placez les blocs de protection au centre à l'extrémité supérieur du cric.

4. Soulevez la chargeuse avec le cric.

! La roue doit être soulevée à environ un centimètre du sol.

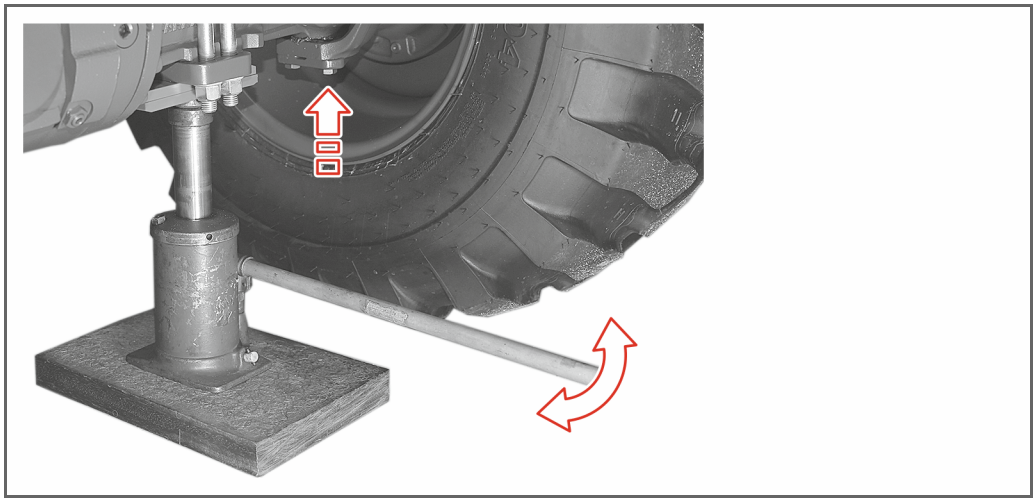

➥ La roue a été soulevée.

5. Ôtez les huit écrous de la roue avec le croisillon.

6. Soulevez prudemment la roue de l'essieu avec l'aide de deux autres personnes.

La roue est démontée

Montage de la roue

Effectuez les opérations suivantes :

1. Placez prudemment la nouvelle roue sur l'essieu avec l'aide de deux autres personnes.

2. Serrez les huit écrous de la roue sur la chargeuse.

! Serrez à fond à la main les écrous de la roue.

3. Desserrez le cric.

4. Retirez le cric le support et les blocs de protection.

5. Serrez à fond les huit écrous de la roue à 500 Nm.

! Utilisez une clé dynamométrique adéquate pour le serrage.

La roue est montée.

✓ Terminé.

Info

Resserrez les écrous de la roue changée après environ dix heures de service.

3.2.2 Remplacer la courroie trapézoïdale

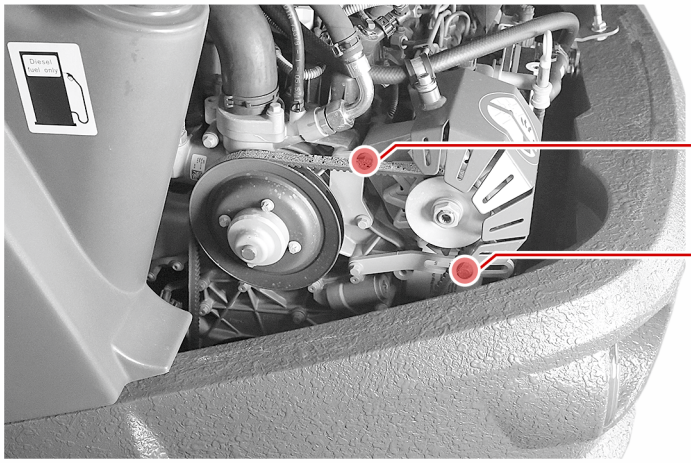

Emplacement des écrous de fixation

Légende

N°	Désignation
1	Écrous de fixation supérieurs
2	Écrous de fixation inférieurs

Condition :

- La chargeuse sur roue se trouve sur une surface horizontale.
- La chargeuse sur roues est hors service.
- Le moteur est froid.
- Le frein de parking est serré.
- La clé de contact est retirée.

Matériel nécessaire :

- Gants de protection
- Une nouvelle courroie trapézoïdale
- Outil à cliquet avec rallonge et clé d'ouverture 13
- Clé plate avec une ouverture de 13

ATTENTION

Risque de blessures par écrasement et sectionnement des membres !

Le compartiment moteur de la chargeuse sur pneus est très étroit. Lors des réparations, vous pouvez vous écraser et vous sectionner les membres.

➔ Toujours porter des gants de protection !

➔ Intervenez toujours de manière raisonnable !

Effectuez les opérations suivantes :

1. Desserrez l'écrou de fixation supérieur avec un outil à cliquet.

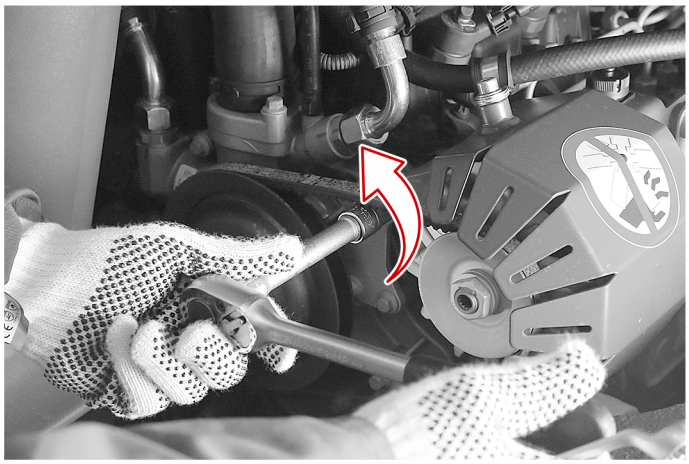

2. Desserrez l'écrou de fixation inférieure avec la clé plate.

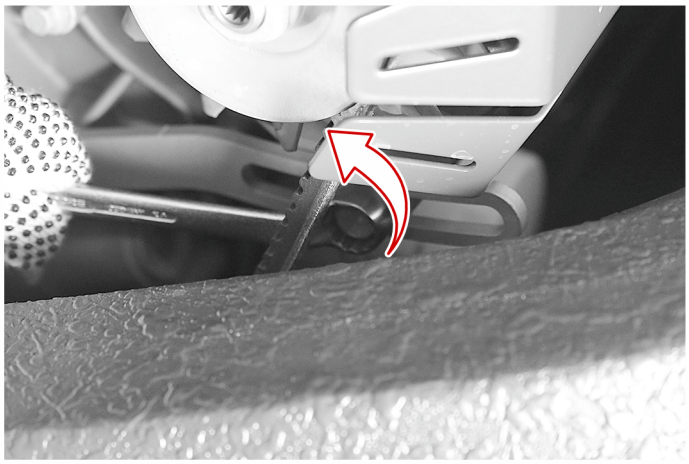

3. Rabattez prudemment l'alternateur dans le compartiment moteur.

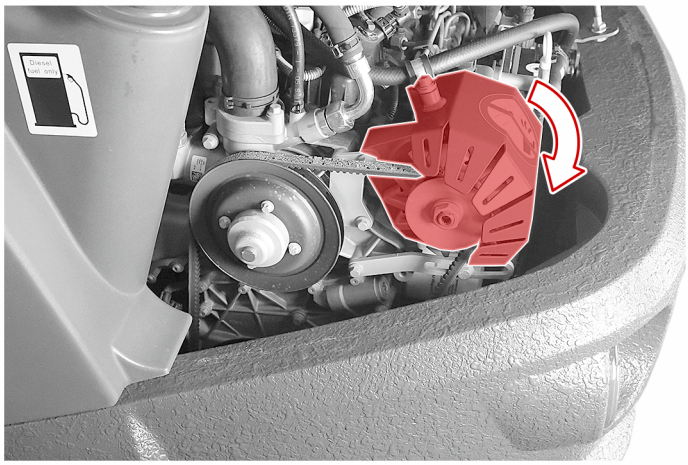

➥ La courroie trapézoïdale est desserrée.

4. Retirez-la.

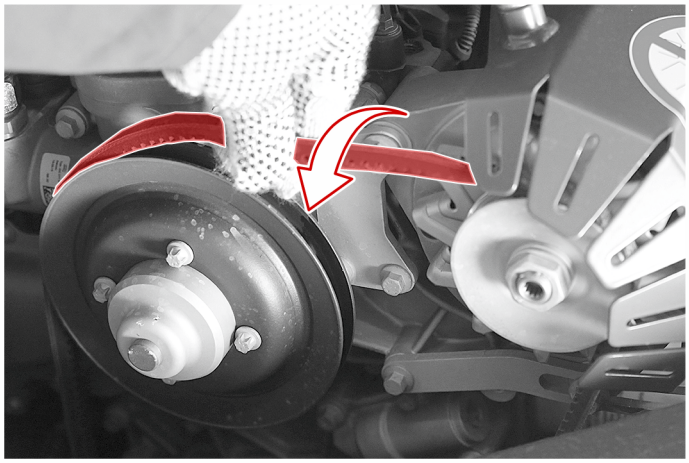

5. Montez la nouvelle courroie.

6. Tirez l'alternateur vers le haut.

➥ La courroie est serrée.

7. Resserrez l'écrou de fixation supérieur et inférieur.

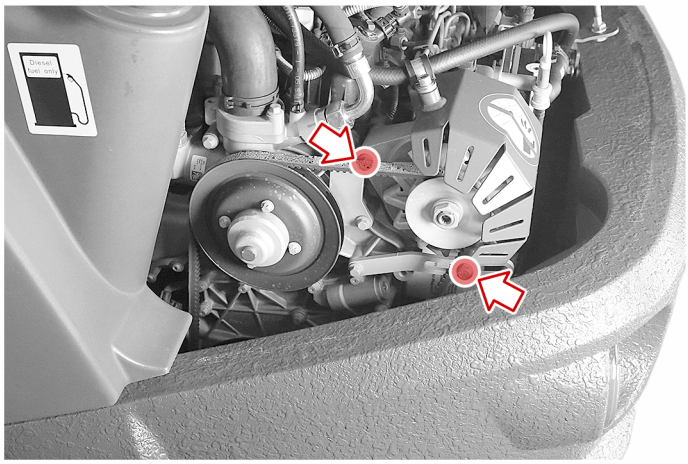

✓ Terminé

3.2.3 Remplacer le filtre amont de carburant

Condition :

- La chargeuse sur roue se trouve sur une surface horizontale.
- La chargeuse sur roues est hors service.
- Le moteur diesel est froid.
- Le frein de parking est serré.
- Le capot moteur de la chargeuse sur roues est ouvert.
- La clé de contact est retirée.

Matériel nécessaire :

- Clé à sangle
- Gants de protection
- Un nouveau préfiltre à carburant

Remplacement du préfiltre à carburant

AVERTISSEMENT

Risque d'incendie lié à une inflammation du gasoil !

Vous pouvez vous ébouillanter. En outre, la chargeuse sur roues sera endommagée par le feu !

➔ Ne fumez jamais lors des interventions sur le filtre à carburant de la chargeuse sur pneus !
➔ Récupérez immédiatement le gasoil déversé.

AVERTISSEMENT

Risque pour la santé lié au gasoil !

Le gasoil est dangereux la santé. Il existe un risque de cancer de la peau au contact répété avec l'huile de transmission.

➔ Éviter le contact cutané prolongé avec le gasoil.
➔ Lors des travaux, portez toujours des gants de protection.

AVIS

Risque pour l'environnement lié au gasoil !

Le gasoil utilisé pour la chargeuse sur roues est dangereux pour l'environnement !

➔ Éliminez le gasoil utilisé en vous conformant à la réglementation en matière d'élimination des déchets locale en vigueur.
➔ Collectez le gasoil déversé dans des récipients adéquats.
➔ Évitez que le gasoil ne se répande sur le sol

Effectuez les opérations suivantes :

1. Retirez précautionneusement le câble de raccordement du capteur de niveau d'eau.

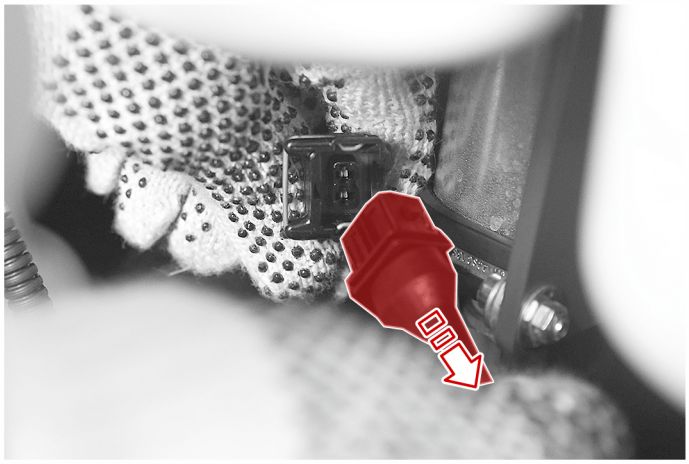

2. Posez la courroie de la clé à ruban autour du préfiltre à carburant.
3. Desserrez le préfiltre à carburant à l'aide de la clé à ruban.

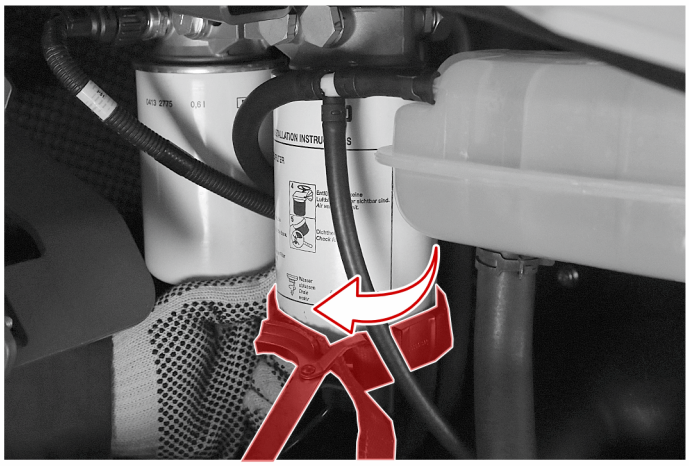

4. Dévissez prudemment le préfiltre à carburant de son support.
5. Dévissez la vanne du séparateur d'eau du préfiltre à carburant.

6. Fixez la vanne du séparateur d'eau sur le nouveau préfiltre à carburant.
7. Revissez le nouveau préfiltre à carburant sur son support.
8. Installez le câble de raccordement du capteur de niveau d'eau.

   Le préfiltre à carburant est remplacé.

Purger le système de carburant

Effectuez les opérations suivantes :

1. Introduisez la clé de démarrage de la chargeuse dans le contacteur.
2. Tournez a clé dans le sens horaire en position **I**.
   ➥ L'allumage de la chargeuse sur roues est enclenché.
   ➥ La pompe d'alimentation carburant est activée.
3. Attendez 20 secondes.
4. Tournez a clé dans le sens horaire en position **0**.
   ➥ L'allumage de la chargeuse sur roues est désactivé.
5. Répétez les opérations **‹1 À 4›** deux fois.
   ➥ Le système carburant est purgé progressivement.
   ➥ La pression carburant nécessaire au démarrage est établie.

   Le système carburant est purgé.

✓ Terminé.

3.2.4 Remplacer le filtre à carburant

Condition :

- La chargeuse sur roue se trouve sur une surface horizontale.
- La chargeuse sur roues est hors service.
- Le moteur diesel est froid.
- Le frein de parking est serré.
- Le capot moteur de la chargeuse sur roues est ouvert.
- La clé de contact est retirée.

Matériel nécessaire :

- Clé à sangle
- Gants de protection
- Un nouveau filtre à carburant

AVERTISSEMENT

Risque d'incendie lié à une inflammation du gasoil !

Vous pouvez vous ébouillanter. En outre, la chargeuse sur roues sera endommagée par le feu !

➔ Ne fumez jamais lors des interventions sur le filtre à carburant de la chargeuse sur pneus !

➔ Récupérez immédiatement le gasoil déversé.

AVERTISSEMENT

Risque pour la santé lié au gasoil !

Le gasoil est dangereux la santé. Il existe un risque de cancer de la peau au contact répété avec l'huile de transmission.

➔ Éviter le contact cutané prolongé avec le gasoil.

➔ Lors des travaux, portez toujours des gants de protection.

AVIS

Risque pour l'environnement lié au gasoil !

Le gasoil utilisé pour la chargeuse sur roues est dangereux pour l'environnement !

➔ Éliminez le gasoil utilisé en vous conformant à la réglementation en matière d'élimination des déchets locale en vigueur.

➔ Collectez le gasoil déversé dans des récipients adéquats.

➔ Évitez que le gasoil ne se répande sur le sol

Effectuez les opérations suivantes :

1. Posez la courroie de la clé à ruban autour du préfiltre à carburant.
2. Desserrez le préfiltre à carburant à l'aide de la clé à ruban.

3. Dévissez prudemment le préfiltre à carburant de son support.
4. Revissez le nouveau préfiltre à carburant sur son support.

✓ Terminé.

3.2.5 Remplacer le filtre à air frais

Condition :

- La chargeuse sur roue se trouve sur une surface horizontale.
- La chargeuse sur roues est hors service.
- Le frein de parking est serré.
- La clé de contact est retirée.

Matériel nécessaire :

- Gants de protection
- Un nouveau filtre à air frais
- Clé plate

Effectuez les opérations suivantes :

1. Desserrez les quatre vis de fixation de l'embase du siège conducteur avec la clé plate.

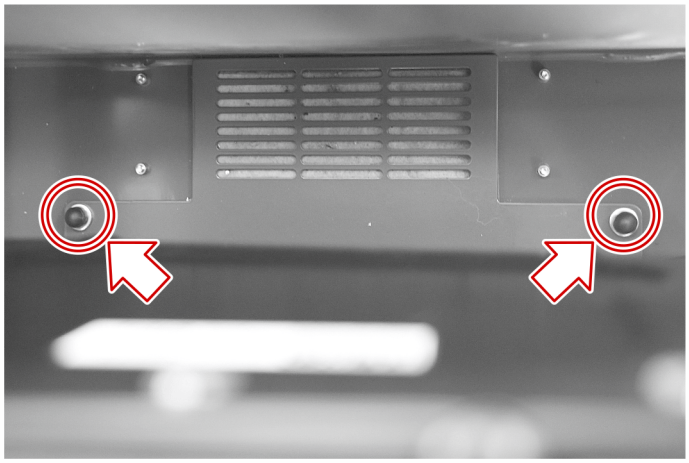

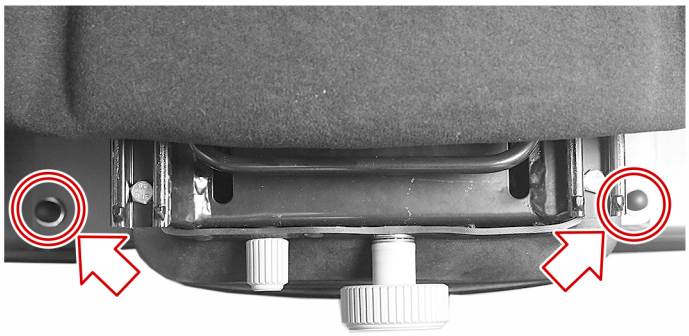

2. Retirez en soulevant avec précaution le siège conducteur et l'embase de la cabine conducteur.
3. Retirez prudemment l'ancien filtre à air frais.
4. Montez le nouveau filtre à air frais.
5. Replacez en soulevant avec précaution le siège conducteur et l'embase dans la cabine conducteur.

6. Resserrez les quatre vis de fixation de l'embase du siège conducteur avec la clé plate.

✓ Terminé.

3.2.6 Remplacer le filtre à huile hydraulique

Condition :

- La chargeuse sur roue se trouve sur une surface horizontale.
- La chargeuse sur roues est hors service.
- Le moteur diesel est froid.
- Le frein de parking est serré.
- Le capot moteur de la chargeuse sur roues est ouvert.
- La clé de contact est retirée.

Matériel nécessaire :

- deux personnes
- Gants de protection
- Clé plate avec une ouverture de 27
- Tapis absorbeurs d'huile
- Réservoir collecteur d'huile
- Un nouveau filtre à huile hydraulique

démontage du filtre à huile hydraulique

AVERTISSEMENT

Risque pour la santé lié à l'huile hydraulique !

L'huile hydraulique est dangereuse pour la santé. Il existe un risque de cancer de la peau au contact répété avec l'huile de transmission.

➔ Éviter le contact cutané prolongé avec l'huile hydraulique.
➔ Lors des travaux, portez toujours des gants de protection.

AVIS

Risque pour l'environnement lié à l'huile hydraulique !

L'huile hydraulique utilisée pour la chargeuse sur roues est dangereuse pour l'environnement !

➔ Éliminez l'huile hydraulique utilisée en vous conformant à la réglementation en matière d'élimination des déchets locale en vigueur.
➔ Récupérez l'huile hydraulique déversée dans des récipients adéquats.
➔ Évitez que l'huile hydraulique ne se répande sur le sol.

Effectuez les opérations suivantes :

1. Posez les tapis absorbeurs d'huile autour du réservoir d'huile hydraulique.
   ➥ Les tapis absorbeurs d'huile protègent le compartiment moteur des impuretés.

2. Desserrez le couvercle du réservoir d'huile hydraulique avec la clé plate.

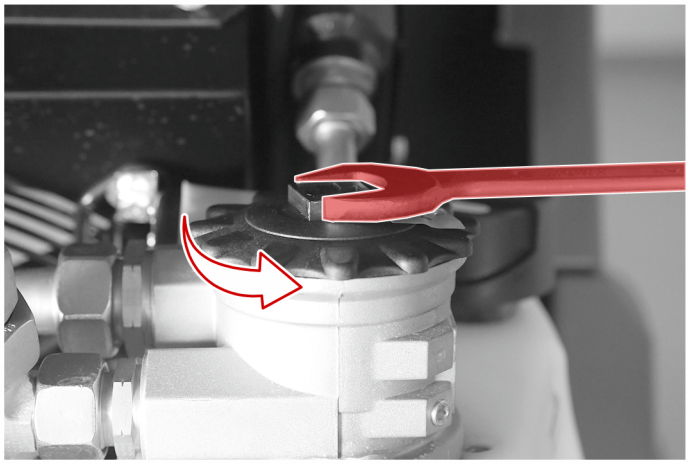

3. Dévissez le couvercle à la main.

4. Retirez le filtre à huile hydraulique par la poignée.

5. Laisser s'écouler l'excédent d'huile hydraulique du réservoir.

6. Déposez le filtre à huile hydraulique dans le réservoir collecteur d'huile.

   ! Une deuxième personne doit tenir le réservoir collecteur d'huile.

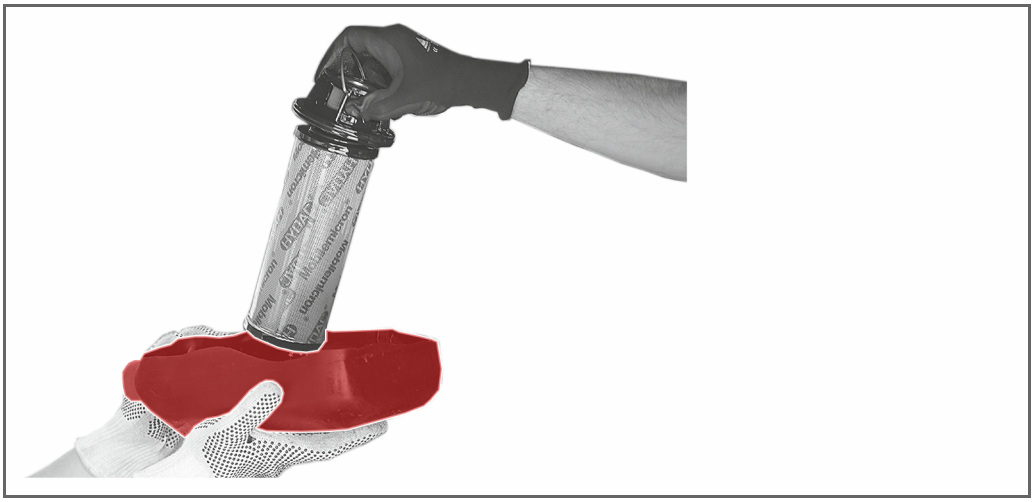

   Le filtre à huile hydraulique est démonté.

Montage du filtre à huile hydraulique

Effectuez les opérations suivantes :

1. Replacez le nouveau filtre à huile hydraulique dans le réservoir d'huile hydraulique.
2. Revissez le couvercle à la main sur le réservoir d'huile hydraulique.
3. Resserrez le couvercle du réservoir d'huile hydraulique avec la clé plate.
4. Retirez les tapis absorbeurs d'huile.
5. Éliminez l'huile hydraulique récupérée en vous conformant à la réglementation locale en vigueur.

   Le filtre à huile hydraulique est monté.

✓ Terminé.

3.2.7 Remplacer le filtre à huile moteur

Condition :

- La chargeuse sur roue se trouve sur une surface horizontale.
- La chargeuse sur roues est hors service.
- Le moteur diesel est froid.
- Le frein de parking est serré.
- Le capot moteur de la chargeuse sur roues est ouvert.
- La clé de contact est retirée.

Matériel nécessaire :

- Clé à sangle
- Gants de protection
- Un nouveau filtre à huile moteur
- Réservoir collecteur d'huile

Démontage du filtre à huile moteur

AVERTISSEMENT

Risque pour la santé lié à l'huile moteur !

L'huile moteur est dangereuse pour la santé. Il existe un risque de cancer de la peau au contact répété avec l'huile de transmission.

➔ Éviter le contact cutané prolongé avec l'huile moteur.
➔ Lors des travaux, portez toujours des gants de protection.

AVIS

Risque pour l'environnement lié à l'huile moteur !

L'huile moteur utilisée pour la chargeuse sur roues est dangereuse pour l'environnement !

➔ Éliminez l'huile moteur utilisée en vous conformant à la réglementation en matière d'élimination des déchets locale en vigueur.
➔ Récupérez l'huile moteur déversée dans des récipients adéquats.
➔ Évitez que l'huile moteur ne se répande sur le sol.

Effectuez les opérations suivantes :

1. Placez le réservoir collecteur sous le filtre à huile moteur.
   ➥ Ce réservoir empêche l'huile moteur de pénétrer dans le sol et dans le compartiment moteur.
2. Posez la courroie de la clé à ruban autour du filtre à huile moteur.

3. Desserrez le filtre à huile moteur à l'aide de la clé à ruban.

4. Dévissez prudemment le filtre à huile moteur de son support.

   Le filtre à huile moteur est démonté.

Montage d'un nouveau filtre à huile moteur

Effectuez les opérations suivantes :

1. Pulvérisez la surface d'étanchéité du nouveau filtre à huile moteur avec de l'huile lubrifiante fraîche.
2. Revissez le nouveau filtre à huile moteur sur son support.
3. Vissez à fond le filtre à huile moteur à la main.
4. Vérifier le niveau d'huile du moteur.
5. Éliminez l'huile moteur récupérée en vous conformant à la réglementation locale en vigueur.

   Le nouveau filtre à huile moteur est monté.

✓ Terminé.

3.2.8 Remplacer le filtre à air

Condition :

- La chargeuse sur roue se trouve sur une surface horizontale.
- La chargeuse sur roues est hors service.
- Le moteur diesel est froid.
- Le capot moteur de la chargeuse sur roues est ouvert.
- La clé de contact est retirée.

Matériel nécessaire :

- Une nouvelle cartouche de filtre à air
- Une nouvelle cartouche de sécurité

Démontage de la cartouche de filtre à air

Effectuez les opérations suivantes :

1. Ouvrez les trois verrouillages du couvercle.

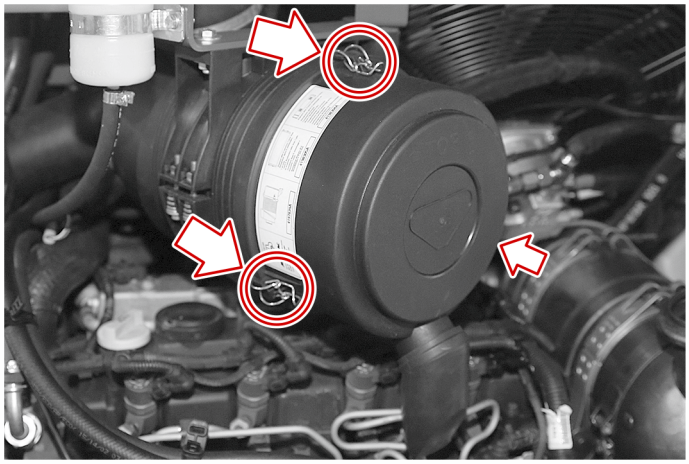

2. Démontez le couvercle.

3. Retirez la cartouche de filtre à air.

! Dévissez la cartouche de filtre à air en effectuant des rotations vers la gauche et vers la droite.

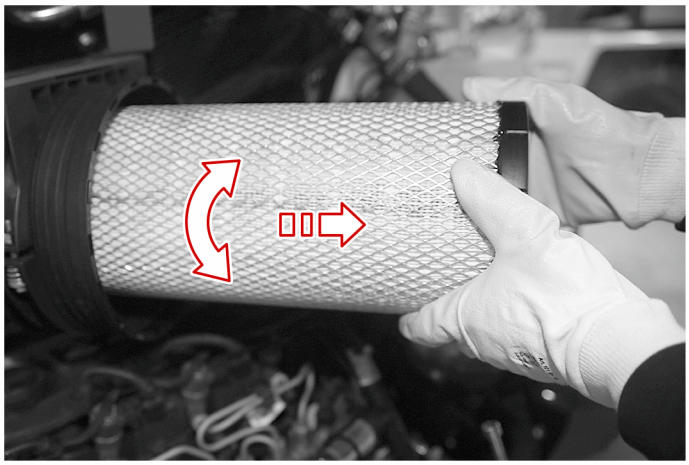

La cartouche de filtre à air est démontée.

Remplacer la cartouche de sécurité

Effectuez les opérations suivantes :

1. Retirez la cartouche de sécurité.

! Dévissez la cartouche de sécurité en effectuant des rotations vers la gauche et vers la droite.

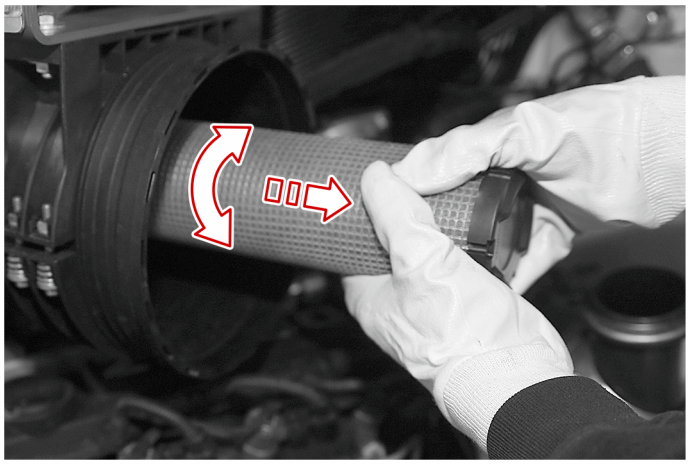

2. Contrôlez les dépôts de poussières et de saletés à l'intérieur du carter de filtre.

! Si nécessaire, nettoyez précautionneusement le carter de filtre avec un chiffon.

3. Insérez doucement la cartouche de sécurité dans le carter de filtre.

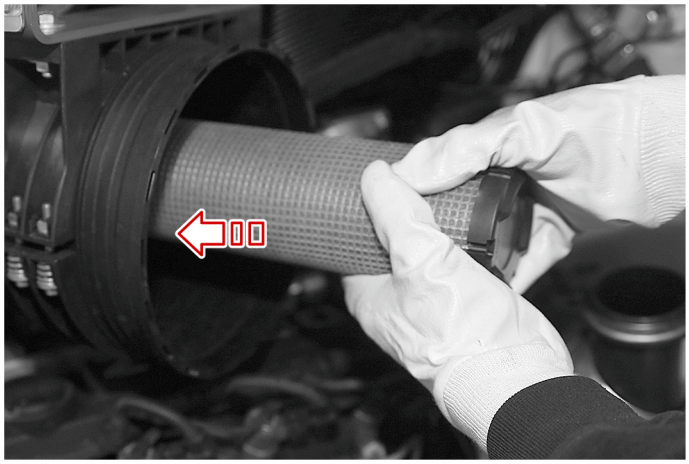

La cartouche de sécurité est remplacée

Montage de la cartouche de filtre à air

Effectuez les opérations suivantes :

1. Introduisez doucement la cartouche de filtre á air sur le support.

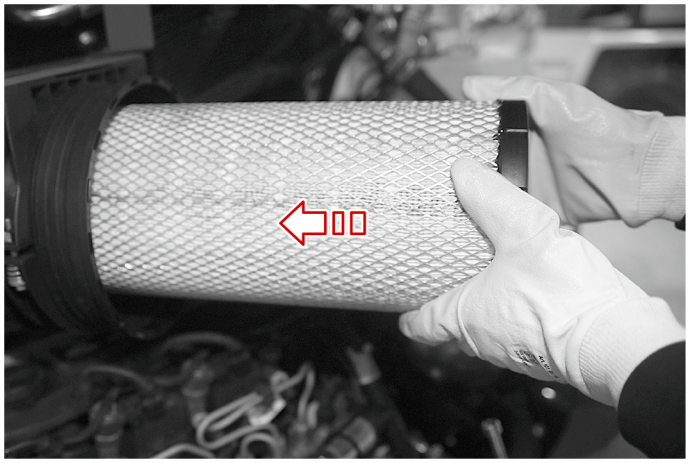

2. Montez le couvercle.

! Veillez lors de l'insertion à ce que le repèreTOP sur le couvercle soit orienté vers le **haut**.

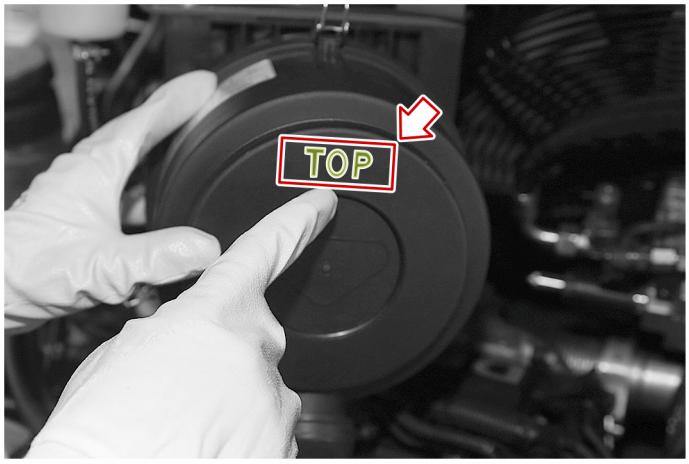

3. Fermez les trois verrouillage du couvercle.

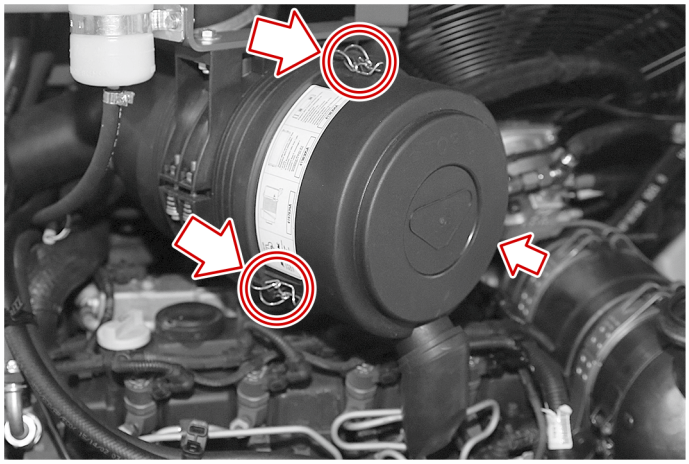

La cartouche de filtre à air est montée.

✓ Terminé.

3.3 Vidanger les fluides

3.3.1 Vidanger l'huile moteur

Condition :

- La chargeuse sur roue se trouve sur une surface horizontale.
- La chargeuse sur roues est hors service.
- La clé de contact est retirée.
- Le moteur est chaud.

Matériel nécessaire :

- Un réservoir collecteur d'huile suffisamment grand
- Un tuyau de purge d'huile adéquat
- Clé plate avec une ouverture de 17
- Gants de protection

Vidanger l'huile moteur

AVERTISSEMENT

Risque pour la santé lié à l'huile moteur !

L'huile moteur est dangereuse pour la santé. Il existe un risque de cancer de la peau au contact répété avec l'huile de transmission.

➔ Éviter le contact cutané prolongé avec l'huile moteur.
➔ Lors des travaux, portez toujours des gants de protection.

AVIS

Risque pour l'environnement lié à l'huile moteur !

L'huile moteur utilisée pour la chargeuse sur roues est dangereuse pour l'environnement !

➔ Éliminez l'huile moteur utilisée en vous conformant à la réglementation en matière d'élimination des déchets locale en vigueur.
➔ Récupérez l'huile moteur déversée dans des récipients adéquats.
➔ Évitez que l'huile moteur ne se répande sur le sol.

Effectuez les opérations suivantes :

1. Desserrez les vis de fixation de la tôle de protection du carter d'huile.

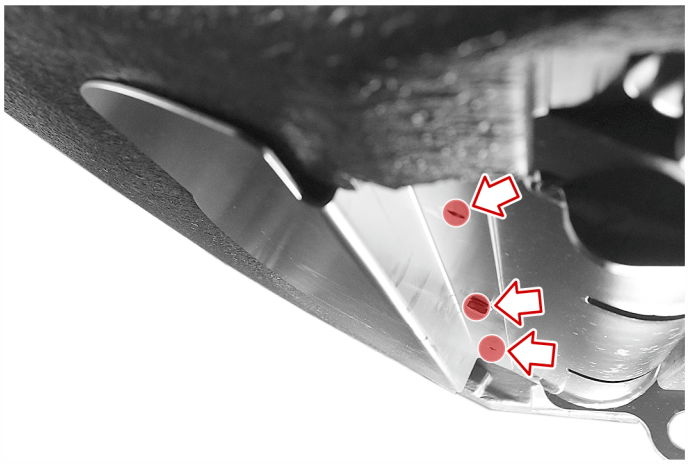

2. Retirez la tôle de protection du carter d'huile.

3. Placez un réservoir collecteur d'huile sous le carter d'huile.

4. Dévissez le capuchon de protection du bouchon de vidange d'huile

5. Vissez le tuyau de vidange d'huile sur le bouchon de vidange d'huile.
   ➥ L'huile moteur commence à s'écouler.
6. Attendez jusqu'à ce que l'huile moteur soit complètement écoulée.
7. Dévissez le tuyau de vidange d'huile sur le bouchon de vidange d'huile.
8. Vissez le capuchon de protection du bouchon de vidange d'huile

   L'huile moteur est vidangée.

Compléter l'huile moteur

Effectuez les opérations suivantes :

➔ Complétez l'huile moteur.

L'huile moteur est complétée.

Effectuer un contrôle

Effectuez les opérations suivantes :

1. Allumez le moteur diesel.
2. Laissez tourner le moteur diesel pendant une courte durée au ralenti.
3. Éteignez le moteur diesel.
4. Vérifiez si le carter d'huile et le bouchon de vidange d'huile présentent des fuites.
5. Ôtez le réservoir collecteur d'huile.
6. Remontez la tôle de protection du carter d'huile à l'aide des trois vis de fixation sur la chargeuse sur pneus.
7. Éliminez l'huile moteur récupérée en vous conformant à la réglementation locale en vigueur.

   Le contrôle est effectué.

✓ Terminé.

3.3.2 Vidanger l'huile de transmission du pont avant

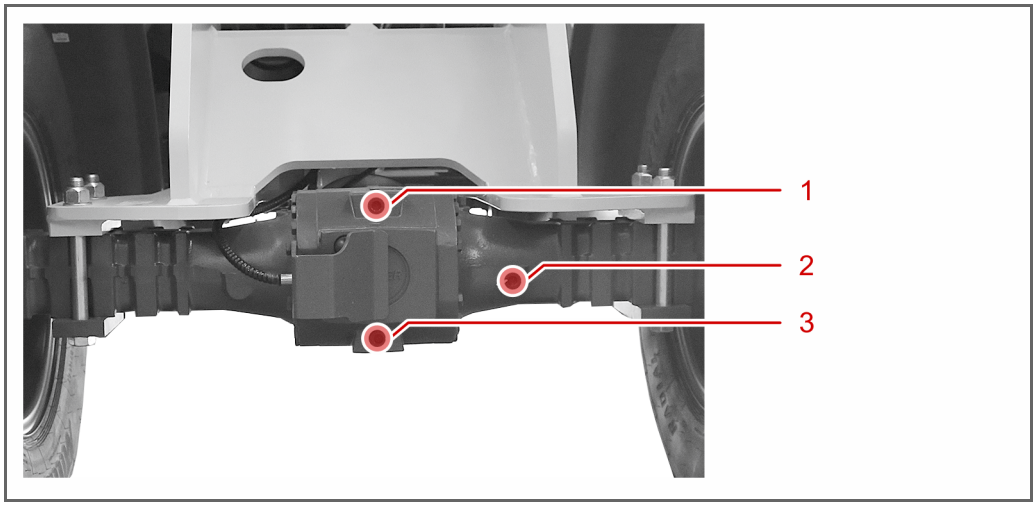

Emplacement des vis sur le pont avant

Légende

N°	Désignation
1	Vis de remplissage
2	Vis de contrôle
3	Vis de purge

Condition :

- La chargeuse sur roues est préchauffée.
- La chargeuse sur roue se trouve sur une surface horizontale.
- La chargeuse sur roues est hors service.
- Le frein de parking est serré.
- La clé de contact est retirée.

Matériel nécessaire :

- Clé à six pans creux avec une ouverture de 12
- Réservoir collecteur d'huile
- Gants de protection
- Nouvelle huile de transmission adéquate

Vidange de l'huile de transmission

AVERTISSEMENT

Risque pour la santé lié à l'huile de transmission !

L'huile de transmission est dangereuse pour la santé. Il existe un risque de cancer de la peau au contact répété avec l'huile de transmission.

➔ Éviter le contact cutané prolongé avec l'huile de transmission.
➔ Lors des travaux, portez toujours des gants de protection.

AVIS

Risque pour l'environnement lié à l'huile de transmission !

L'huile de transmission utilisée pour la chargeuse sur roues est dangereuse pour l'environnement !

➔ Éliminez l'huile de transmission utilisée en vous conformant à la réglementation en matière d'élimination des déchets locale en vigueur.
➔ Récupérez l'huile de transmission déversée dans des récipients adéquats.
➔ Évitez que l'huile de transmission ne se répande sur le sol.

Effectuez les opérations suivantes :

1. Placez un réservoir collecteur d'huile sous le pont avant.
➥ Ce réservoir empêche l'huile de transmission de pénétrer dans le sol.

2. Desserrez la vis de purge avec une clé à six pans creux.

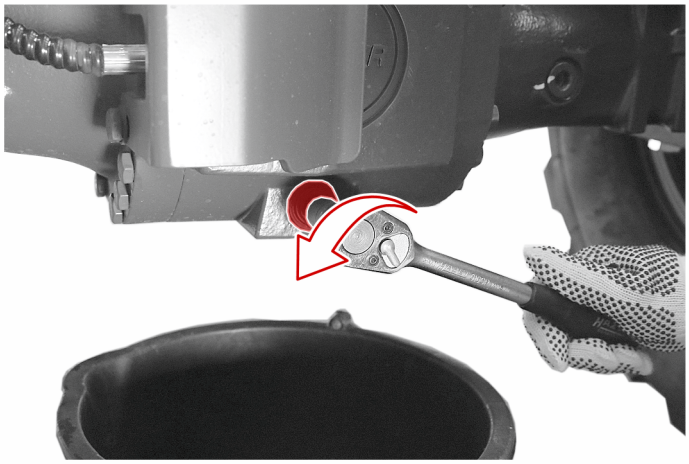

➥ L'huile de transmission s'écoule immédiatement.

3. Attendez jusqu'à ce que l'huile de transmission soit complètement écoulée.

4. Resserrez la vis de purge sur le pont avant avec une clé à six pans creux.

L'huile de transmission et vidangée.

Compléter l'huile de transmission

Effectuez les opérations suivantes :

1. Desserrez la vis de contrôle avec une clé à six pans creux.

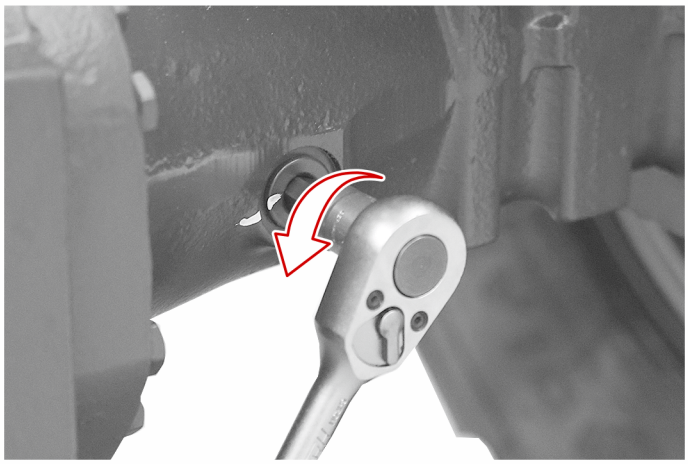

2. Desserrez la vis de remplissage avec une clé à six pans creux.

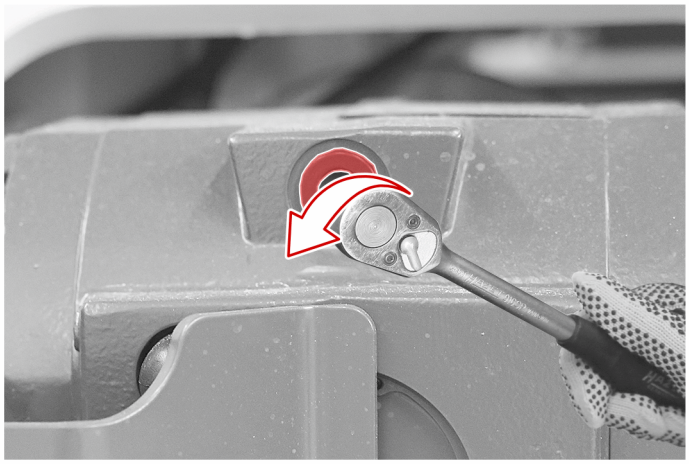

3. Complétez l'huile de transmission jusqu'au bord inférieur de l'orifice de contrôle.

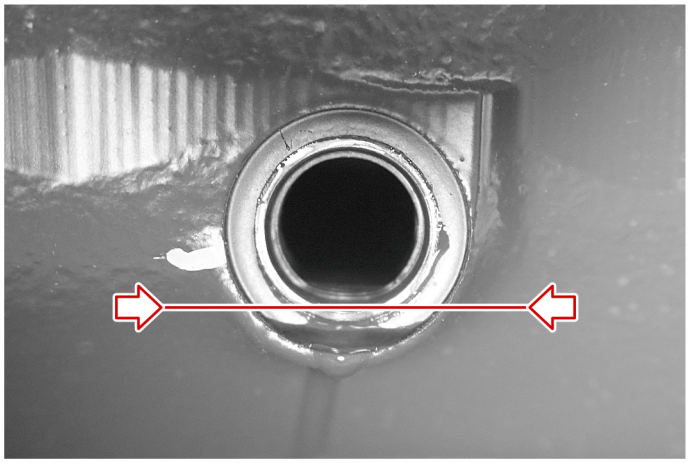

4. Serrez à fond la vis de contrôle avec une clé à six pans creux.
5. Serrez à fond la vis de remplissage avec une clé à six pans creux.
6. Éliminez l'huile de transmission récupérée en vous conformant à la réglementation locale en vigueur.

   L'huile de transmission est remplie.

✓ Terminé.

3.3.3 Vidanger l'huile de transmission du pont arrière

Condition :

- La chargeuse sur roues est préchauffée.
- La chargeuse sur roue se trouve sur une surface horizontale.
- La chargeuse sur roues est hors service.
- Le frein de parking est serré.
- La clé de contact est retirée.

Matériel nécessaire :

- Clé à six pans creux avec une ouverture de 12
- Réservoir collecteur d'huile
- Gants de protection
- Nouvelle huile de transmission adéquate

Vidange de l'huile de transmission

AVERTISSEMENT

Risque pour la santé lié à l'huile de transmission !

L'huile de transmission est dangereuse pour la santé. Il existe un risque de cancer de la peau au contact répété avec l'huile de transmission.

➔ Éviter le contact cutané prolongé avec l'huile de transmission.
➔ Lors des travaux, portez toujours des gants de protection.

AVIS

Risque pour l'environnement lié à l'huile de transmission !

L'huile de transmission utilisée pour la chargeuse sur roues est dangereuse pour l'environnement !

➔ Éliminez l'huile de transmission utilisée en vous conformant à la réglementation en matière d'élimination des déchets locale en vigueur.
➔ Récupérez l'huile de transmission déversée dans des récipients adéquats.
➔ Évitez que l'huile de transmission ne se répande sur le sol.

Effectuez les opérations suivantes :

1. Placez un réservoir collecteur d'huile sous le pont arrière.
   ➥ Ce réservoir empêche l'huile de transmission de pénétrer dans le sol.

2. Desserrez la vis de purge avec une clé à six pans creux.

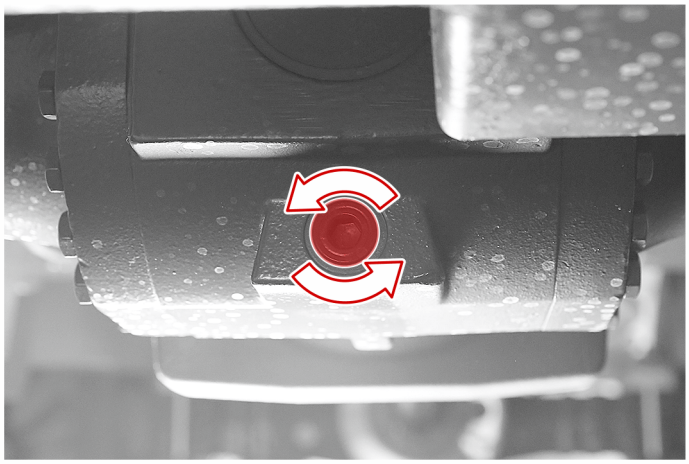

➥ L'huile de transmission s'écoule immédiatement.

3. Attendez jusqu'à ce que l'huile de transmission soit complètement écoulée.

4. Resserrez la vis de purge sur le pont arrière avec une clé à six pans creux.

L'huile de transmission et vidangée.

Compléter l'huile de transmission

Effectuez les opérations suivantes :

1. Desserrez la vis de contrôle avec une clé à six pans creux.

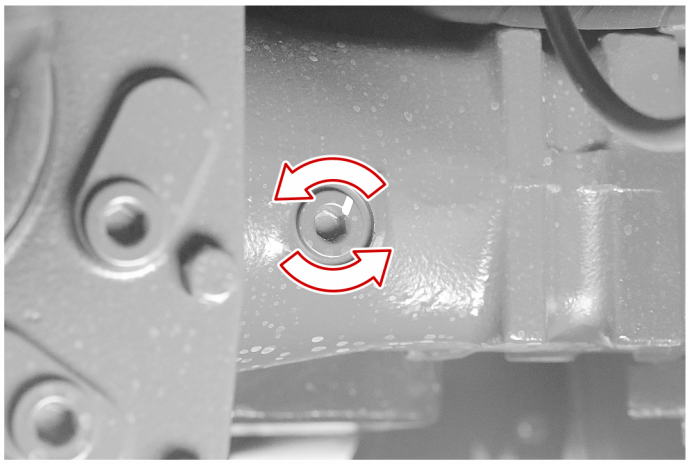

2. Complétez l'huile de transmission jusqu'au bord inférieur de l'orifice de contrôle.

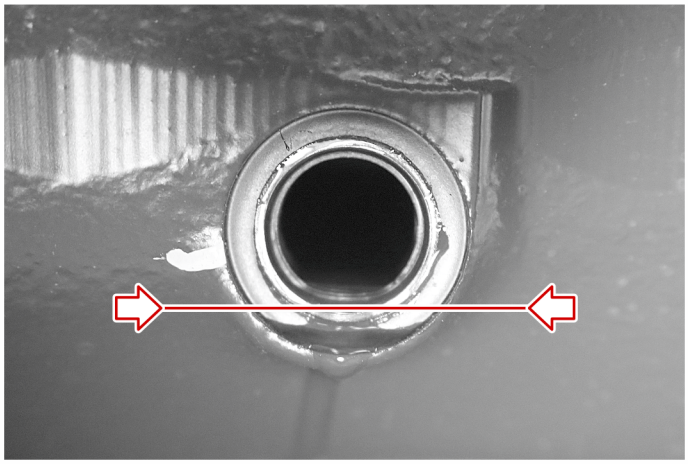

3. Serrez à fond la vis de contrôle avec une clé à six pans creux.

4. Éliminez l'huile de transmission récupérée en vous conformant à la réglementation locale en vigueur.

L'huile de transmission est remplie.

✓ Terminé.

3.3.4 Vidanger l'huile de transmission de l'engrenage planétaire

Condition :

- La chargeuse sur roues est préchauffée.
- La chargeuse sur roue se trouve sur une surface horizontale.
- La chargeuse sur roues est hors service.
- Le frein de parking est serré.
- La clé de contact est retirée.

Matériel nécessaire :

- Clé à six pans creux avec une ouverture de 12
- Réservoir collecteur d'huile
- Gants de protection
- Nouvelle huile de transmission adéquate

Vidange de l'huile de transmission

AVERTISSEMENT

Risque pour la santé lié à l'huile de transmission !

L'huile de transmission est dangereuse pour la santé. Il existe un risque de cancer de la peau au contact répété avec l'huile de transmission.

➔ Éviter le contact cutané prolongé avec l'huile de transmission.
➔ Lors des travaux, portez toujours des gants de protection.

AVIS

Risque pour l'environnement lié à l'huile de transmission !

L'huile de transmission utilisée pour la chargeuse sur roues est dangereuse pour l'environnement !

➔ Éliminez l'huile de transmission utilisée en vous conformant à la réglementation en matière d'élimination des déchets locale en vigueur.
➔ Récupérez l'huile de transmission déversée dans des récipients adéquats.
➔ Évitez que l'huile de transmission ne se répande sur le sol.

Effectuez les opérations suivantes :

1. Manœuvrez la chargeuse sur pneus de sorte que la vis de contrôle de l'engrenage planétaire se trouve en position de butée inférieure.

2. Placez un réservoir collecteur d'huile sur la jante.

➥ Ce réservoir empêche l'huile de transmission de pénétrer dans le sol.

3. Desserrez la vis de contrôle avec une clé à six pans creux.

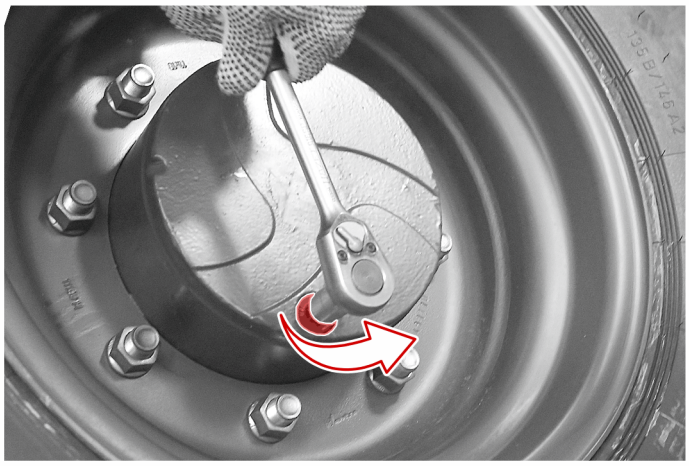

➥ L'huile de transmission s'écoule immédiatement.

4. Attendez jusqu'à ce que l'huile de transmission soit complètement écoulée.

5. Resserrez la vis de purge sur l'engrenage planétaire avec une clé à six pans creux.

L'huile de transmission et vidangée.

Compléter l'huile de transmission

Effectuez les opérations suivantes :

1. Manœuvrez la chargeuse de sorte que que la ligne de remplissage `Oil Level` soit orientée horizontalement sur l'engrenage planétaire.

2. Desserrez la vis de contrôle avec une clé à six pans creux.

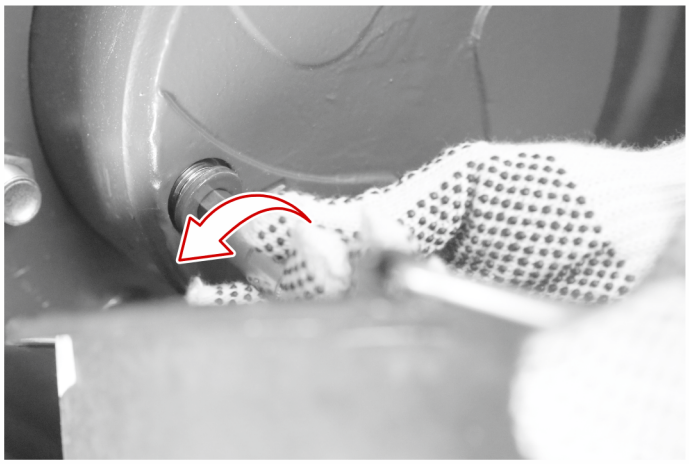

3. Remplissez l'huile de transmission par l'orifice de contrôle.

   ! Le niveau d'huile doit atteindre exactement le bord inférieur de l'orifice de contrôle

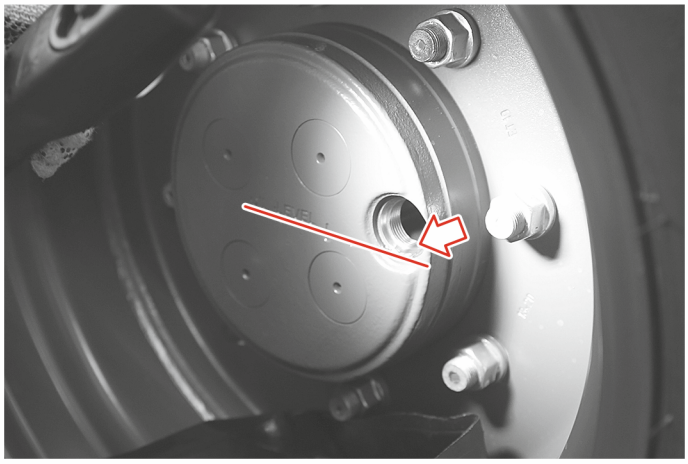

4. Serrez à fond la vis de contrôle avec une clé à six pans creux.
5. Essuyez l'huile de transmission éventuellement déversée avec un chiffon.
6. Éliminez l'huile de transmission récupérée en vous conformant à la réglementation locale en vigueur.

   L'huile de transmission est remplie.

✓ Terminé.

3.3.5 Vidanger l'huile de transmission du réducteur planétaire

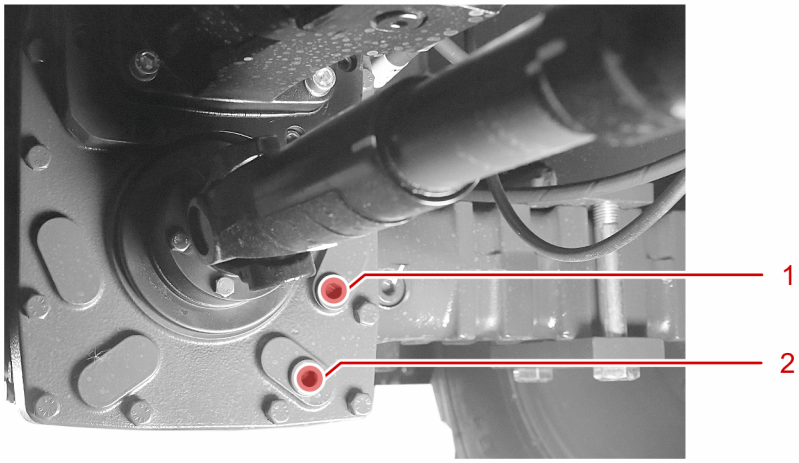

Emplacement des vis sur le réducteur planétaire

Légende

N°	Désignation
1	Vis de contrôle
2	Vis de purge

Condition :

- La chargeuse sur roues est préchauffée.
- La chargeuse sur roue se trouve sur une surface horizontale.
- La chargeuse sur roues est hors service.
- Le frein de parking est serré.
- La clé de contact est retirée.

Matériel nécessaire :

- Clé à six pans creux avec une ouverture de 12
- Réservoir collecteur d'huile
- Gants de protection
- Nouvelle huile de transmission adéquate

Vidange de l'huile de transmission

AVERTISSEMENT

Risque pour la santé lié à l'huile de transmission !

L'huile de transmission est dangereuse pour la santé. Il existe un risque de cancer de la peau au contact répété avec l'huile de transmission.

➔ Éviter le contact cutané prolongé avec l'huile de transmission.
➔ Lors des travaux, portez toujours des gants de protection.

AVIS

Risque pour l'environnement lié à l'huile de transmission !

L'huile de transmission utilisée pour la chargeuse sur roues est dangereuse pour l'environnement !

➔ Éliminez l'huile de transmission utilisée en vous conformant à la réglementation en matière d'élimination des déchets locale en vigueur.
➔ Récupérez l'huile de transmission déversée dans des récipients adéquats.
➔ Évitez que l'huile de transmission ne se répande sur le sol.

Effectuez les opérations suivantes :

1. Placez un réservoir collecteur d'huile sous le réducteur planétaire.
   ➥ Ce réservoir empêche l'huile de transmission de pénétrer dans le sol.

2. Desserrez la vis de purge avec une clé à six pans creux.

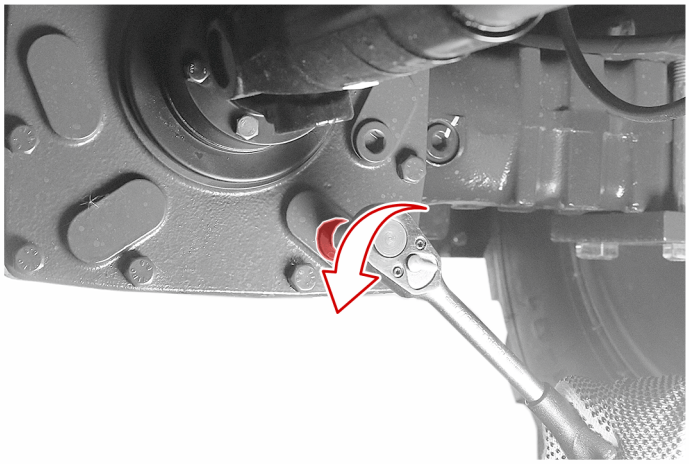

➥ L'huile de transmission s'écoule immédiatement.

3. Attendez jusqu'à ce que l'huile de transmission soit complètement écoulée.

4. Serrez à fond la vis de vidange avec une clé à six pans creux.

L'huile de transmission et vidangée.

Compléter l'huile de transmission

Effectuez les opérations suivantes :

1. Desserrez la vis de contrôle avec une clé à six pans creux.

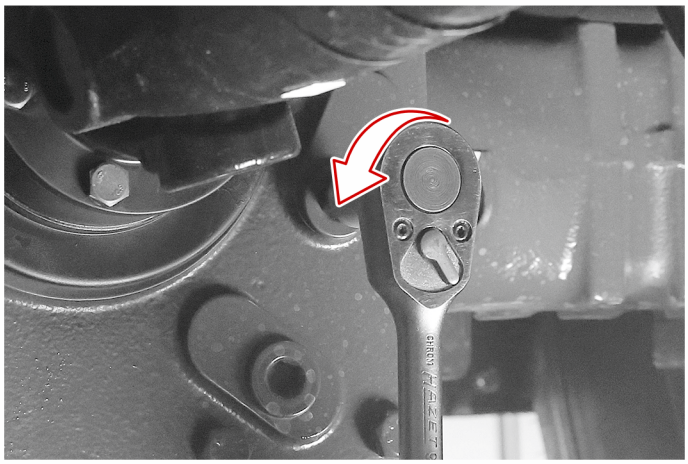

2. Remplissez le réducteur planétaire avec l'huile de transmission.

! Le niveau d'huile doit atteindre exactement le bord inférieur de l'orifice de contrôle

3. Serrez à fond la vis de contrôle avec une clé à six pans creux.

4. Ôtez le réservoir collecteur d'huile.

5. Éliminez l'huile de transmission récupérée en vous conformant à la réglementation locale en vigueur.

   L'huile de transmission est remplie.

✓ Terminé.

3.3.6 Vidanger le gasoil

Condition :

- La chargeuse sur roue se trouve sur une surface horizontale.
- La chargeuse sur roues est hors service.
- La clé de contact est retirée.
- Le frein de parking est serré.

Matériel nécessaire :

- Chiffons
- Clé de démarrage
- Gants de protection
- Outil à cliquet avec rallonge et clé
- Réservoir collecteur de gasoil
- Nouveau gasoil adéquat

Purger le gasoil

AVERTISSEMENT

Risque d'incendie lié à une inflammation du gasoil !

Vous pouvez vous ébouillanter. En outre, la chargeuse sur roues sera endommagée par le feu !

➔ Faites le plein de la chargeuse sur roues uniquement lorsque le moteur est refroidi.
➔ Ne **fumez jamais** lorsque vous faites le plein de la chargeuse !
➔ Récupérez immédiatement le gasoil déversé.

AVERTISSEMENT

Risque pour la santé lié au gasoil !

Le gasoil est dangereux la santé. Il existe un risque de cancer de la peau au contact répété avec l'huile de transmission.

➔ Éviter le contact cutané prolongé avec le gasoil.
➔ Lors des travaux, portez toujours des gants de protection.

AVIS

Risque pour l'environnement lié au gasoil !

Le gasoil utilisé pour la chargeuse sur roues est dangereux pour l'environnement !

➔ Éliminez le gasoil utilisé en vous conformant à la réglementation en matière d'élimination des déchets locale en vigueur.
➔ Collectez le gasoil déversé dans des récipients adéquats.
➔ Évitez que le gasoil ne se répande sur le sol.

Effectuez les opérations suivantes :

1. Placez un réservoir collecteur de gasoil sous le réservoir de carburant.
   ➥ Ce réservoir empêche le gasoil de pénétrer dans le sol.

2. Dévissez la vis de purge avec l'outil à cliquet avec rallonge.

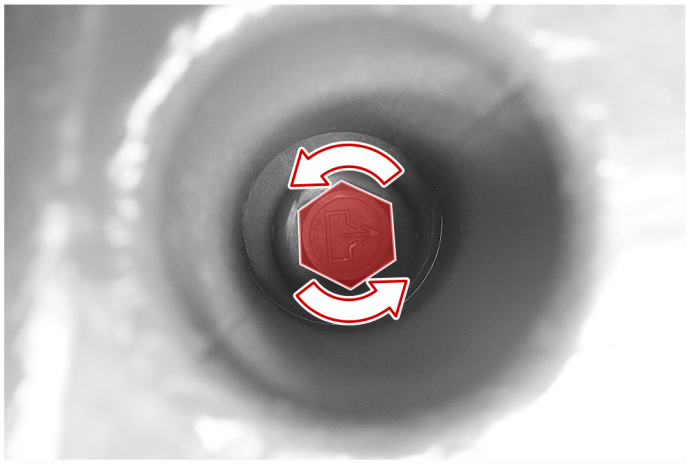

➥ Le gasoil s'écoule immédiatement.

3. Attendez jusqu'à ce que le gasoil soit complètement écoulé.
4. Serrez à fond la vis de purge avec l'outil à cliquet avec rallonge.

   Le gasoil est purgé.

Compléter le niveau de gasoil

Effectuez les opérations suivantes :

1. Ouvrez le capot moteur.
2. Ouvrez le ‹COUVERCLE DU RÉSERVOIR› de ‹L'EMBOUT DE REMPLISSAGE DE GASOIL›.

3. Remplissez doucement ‹LE GASOIL›dans le‹RÉSERVOIR›.
4. Fermez le ‹COUVERCLE DU RÉSERVOIR› de ‹L'EMBOUT DE REMPLISSAGE DE GASOIL›.
5. Essuyez le ‹GASOIL› qui s'est éventuellement déversé avec un ‹CHIFFON›.

6. Fermez le capot moteur.

Le gasoil est complété.

✓ Terminé.

3.4 Graissage

3.4.1 Plan de graissage

Plan de graissage de la chargeuse sur roues Série AX

Intervalle de graissage	Pièce sur la chargeuse sur pneus	Nombre de points de graissage
après 50 heures de service	Capot moteur	**2** Points de graissage, voir section „Points de graissage sur le capot moteur“ (page 74)
après 50 heures de service	Portes	**4** Points de graissage, voir section „Points de graissage sur les portes“ (page 75)

3.4.2 Points de graissage sur le capot moteur

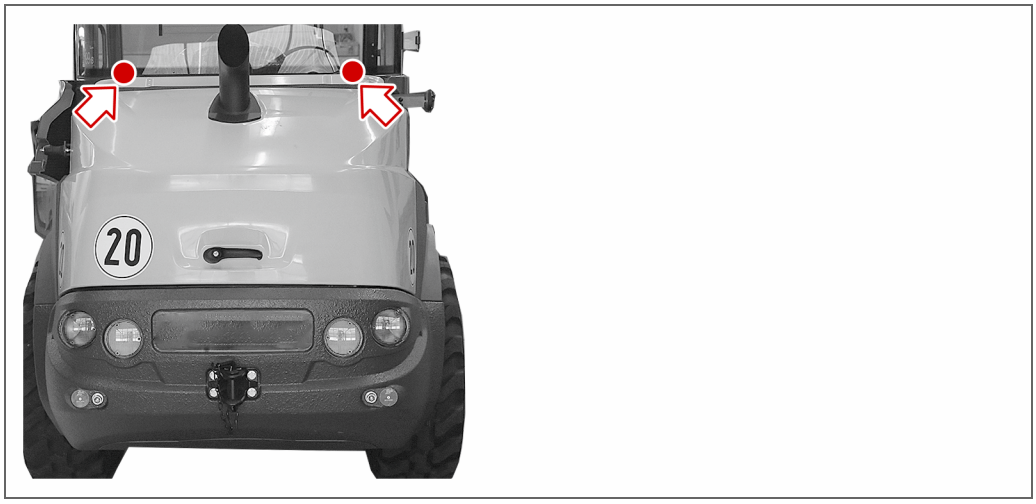

Capot moteur | 2 points de graissage

3.4.3 Points de graissage sur les portes

Porte | respectivement 2 points de graissage (des deux côtés)

4 Schémas électriques

Mecalac vous fournit les schémas électriques sur demande.

5 Annexe

5.1 Pièces de rechange

5.1.1 Filtre

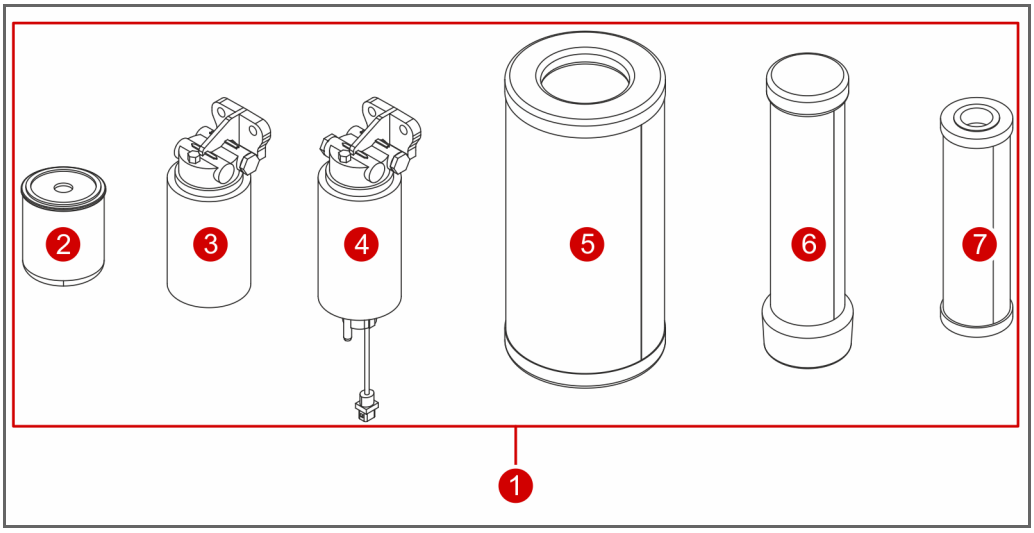

Vue d'ensemble du filtre

Légende

N°	Désignation	Mecalac TKZ
1	Ensemble de filtres	23133428
2	Filtre à huile moteur	23110650
3	Filtre à carburant	23133339
4	Filtre à carburant	23133338
5	Ensemble de filtres à air	4198305A
6	Cartouche de sécurité	4198304A
7	Filtreà huile hydraulique	23109159

5.1.2 Fluides

Légende

Désignation	Quantité	Mecalac TKZ
Huile moteur	8	2320062
Huile de transmission	16	23104578
Huile hydraulique	60	23107305
Cartouche de graisse	1	4117807A
Liquide de refroidissement	14	23129554

5.2 Messages de défauts Deutz

11 / 107 / AirFltSysReac

Error description AIR FILTER COND.
Air filter differential pressure: the pressure difference of the intake air between the filter inlet and outlet calculated by ECU is above the target range and the ECU activates a system reaction

Error codes
DEUTZ-Errorcode: 11
BlinkCode (short-long-short): 1 - 3 - 6
SPN: 107
possible FMI:
0: data valid, but above normal working area
12. Errormode not identifiable
12. Errormode not identifiable
12. Errormode not identifiable

Errordetection
Errorlamp shows permanent light. Entry in errormemory.

Possible reason for error
Pressure loss above target range with system reaction, air filter clogged or defective, sensor not working, connection cable demaged

Take actions for error repair
Check airfilter and if necessary clean or renew it, check cabling, check air filter and if necessary replace the filter component, check sensor and if necessary replace it, check connection cable and if necessary repair or replace it

other error properties
System reaction: Warning or Warning and power reduction
Behaviour error lamp: permanent light
Selfhealing: yes
Signal Priority: 2
Measurement @ errortime: actual value

12 / 91 / APP1

Error description THROTTLE 1
Analog accelerator pedal sensor 1 or double accelerator pedal sensor: the voltage measured by ECU is out of the target range or the calculated pedal position is implausible compared with the position of the second pedal

Error codes
DEUTZ-Errorcode: 12
BlinkCode (short-long-short): 2 - 2 - 6
SPN: 91
possible FMI:
3: Voltage to high or short circuit to +Ubatt
4: Voltage to low or short circuit to -Ubatt
12. Errormode not identifiable
2: data stream is defective

Errordetection
Errorlamp shows permanent light. Entry in errormemory.

Possible reason for error
Voltage outside target range, signal implausible compared to signal of redundant pedal (analog pedal 1), sensor defective, connection cable demaged

Take actions for error repair
Check cabling, check accelator pedal sensor and if necessary replace it, check connection cable and if necessary repair or replace it

other error properties
System reaction: Warning, switching to substitute value correspond to Priority-Chain or Limp Home
Behaviour error lamp: permanent light
Selfhealing: no
Signal Priority: 4
Measurement @ errortime: actual value

14 / 91 / APPPwm

Error description THROTTLE 1
Digital accelerator pedal sensor (PWM): the signal received by ECU is defective or implausible or the pulse-duty factor is out of the target range

Error codes
DEUTZ-Errorcode: 14
BlinkCode (short-long-short): 2 - 2 - 2
SPN: 91
possible FMI:
8: unusual frequency, pulse or period.
8: unusual frequency, pulse or period.
2: data stream is defective
8: unusual frequency, pulse or period.

Errordetection
Errorlamp shows permanent light. Entry in errormemory.

Possible reason for error
Duty cycle outside target range, signal erroneous or implausible (pedal 1), sensor defective, onnection cable demaged

Take actions for error repair
Check cabling, check accelator pedal sensor and if necessary replace it, check connection cable and if necessary repair or replace it

other error properties
System reaction: Warning, switching to substitute value correspond to Priority-Chain or Limp Home
Behaviour error lamp: permanent light
Selfhealing: yes
Signal Priority: 4
Measurement @ errortime: actual value

15 / 91 / APPPwmPer

Error description THROTTLE 1
digital accelerator pedal sensor (PWM): the frequence of the signal received by ECU is out of the target range

Error codes
DEUTZ-Errorcode: 15
BlinkCode (short-long-short): 2 - 2 - 2
SPN: 91
possible FMI:
8: unusual frequency, pulse or period.
8: unusual frequency, pulse or period.
12. Errormode not identifiable
12. Errormode not identifiable

Errordetection
Errorlamp shows permanent light. Entry in errormemory.

Possible reason for error
Pulse frequency outside target range (pedal 1), sensor defective, connection cable demaged

Take actions for error repair
Check cabling, check accelator pedal sensor and if necessary replace it, check connection cable and if necessary repair or replace it

other error properties
System reaction: Warning, switching to substitute value correspond to Priority-Chain or Limp Home
Behaviour error lamp: permanent light
Selfhealing: yes
Signal Priority: 4
Measurement @ errortime: actual value

16 / 108 / APSCD

Error description BAROMETRIC PRESS.
Ambient air pressure sensor (in ECU): the voltage measured by ECU is out of the target range or the calculated ambient air pressure is implausible compared with the charge air pressure

Error codes
DEUTZ-Errorcode: 16
BlinkCode (short-long-short): 2 - 9 - 2
SPN: 108
possible FMI:
3: Voltage to high or short circuit to +Ubatt
4: Voltage to low or short circuit to -Ubatt
12. Errormode not identifiable
2: data stream is defective

Errordetection
Errorlamp shows permanent light. Entry in errormemory.

Possible reason for error
Ambient air pressure sensor defective, ECU defective

Take actions for error repair
Change ECU

other error properties
System reaction: Warning, substitute value (0,85bar)
Behaviour error lamp: permanent light
Selfhealing: yes
Signal Priority: 4
Measurement @ errortime: default value

17 / 729 / ArHt1

Error description AIR HEATER RELAY
Air heater relay: the current drain measured by ECU is out of the target range

Error codes
DEUTZ-Errorcode: 17
BlinkCode (short-long-short): 2 - 6 - 3
SPN: 729
possible FMI:
3: Voltage to high or short circuit to +Ubatt
4: Voltage to low or short circuit to -Ubatt
5: current to low or broken wire
12. Errormode not identifiable

Errordetection
Errorlamp shows permanent light. Entry in errormemory.

Possible reason for error
Cable break or short circuit at EDC output, relay defective, connection cable demaged

Take actions for error repair
Check cabling, if sensor not working, check relay and if necessary replace it, check connection cable and if necessary repair or replace it

other error properties
System reaction: Warning, shutoff output
Behaviour error lamp: permanent light
Selfhealing: yes
Signal Priority: 2
Measurement @ errortime: shut off value

18 / 730 / ArHt2

Error description AIR HEATER VALVE
Air heater magnet valve: the current drain measured by ECU is out of the target range

Error codes
DEUTZ-Errorcode: 18
BlinkCode (short-long-short): 2 - 6 - 3
SPN: 730
possible FMI:
3: Voltage to high or short circuit to +Ubatt
4: Voltage to low or short circuit to -Ubatt
5: current to low or broken wire
12. Errormode not identifiable

Errordetection
Errorlamp shows permanent light. Entry in errormemory.

Possible reason for error
Cable break or short circuit, valve defective, connection cable demaged

Take actions for error repair
Check valve and if necessary replace it, check connection cable and if necessary repair or replace it

other error properties
System reaction:
Behaviour error lamp: permanent light
Selfhealing: yes
Signal Priority: 2
Measurement @ errortime: shut off value

19 / 676 / ArHtCD_NoLd

Error description AIR HEATER
Air heater relay: the ECU detects no switching operation at the input of a readback process

Error codes
DEUTZ-Errorcode: 19
BlinkCode (short-long-short): 2 - 6 - 3
SPN: 676
possible FMI:
12. Errormode not identifiable
4: Voltage to low or short circuit to -Ubatt
12. Errormode not identifiable
12. Errormode not identifiable

Errordetection
Errorlamp shows permanent light. Entry in errormemory.

Possible reason for error
Relay energized, but no feedback on sense line, relay defective or wrong wired, preheat component defective, connection cable demaged

Take actions for error repair
Check cabling of preheat component, if relay not working,check relay and if necessary replace it, check preheat component and if necessary replace it, check connection cable and if necessary repair or replace it

other error properties
System reaction: Warning
Behaviour error lamp: permanent light
Selfhealing: no
Signal Priority: 3
Measurement @ errortime: setpoint for output status

20 / 676 / ArHtCD_RlyErr

Error description AIR HEATER
Air heater relay: the ECU detects an implausible signal at the input of a readback process

Error codes
DEUTZ-Errorcode: 20
BlinkCode (short-long-short): 2 - 6 - 3
SPN: 676
possible FMI:
5: current to low or broken wire
2: data stream is defective
12. Errormode not identifiable
12. Errormode not identifiable

Errordetection
Errorlamp shows permanent light. Entry in errormemory.

Possible reason for error
Relay not energized, but working voltage on sense line, relay defective (can not disconnect or switch off), preheat component defective, connection cable demaged

Take actions for error repair
Check cabling of preheat component, if relay not working,check relay and if necessary replace it, check preheat component and if necessary replace it, check connection cable and if necessary repair or replace it

other error properties
System reaction: Warning
Behaviour error lamp: permanent light
Selfhealing: no
Signal Priority: 3
Measurement @ errortime: setpoint for output status

22 / 168 / BattCD

Error description BATTERY VOLTAGE
Battery voltage: the voltage measured by ECU is out of the target range

Error codes
DEUTZ-Errorcode: 22
BlinkCode (short-long-short): 3 - 1 - 8
SPN: 168
possible FMI:
0: data valid, but above normal working area
1: data valid, but below normal working area
12. Errormode not identifiable
12. Errormode not identifiable

Errordetection
Errorlamp shows permanent light. Entry in errormemory.

Possible reason for error
Voltage below target range, battery defective, too high power supply voltage, too high contact resistance, wiring demaged, energie system overloaded, parametering inaccurate, ECU defective

Take actions for error repair
Check LIMA?, ECU, cabling, contact resistance, safety fuses, too high load in energy system, check battery and if necessary replace it, check battery pole and if necessary clean it, check connection cable and if necessary repair or replace it, check volta

other error properties
System reaction: Warning, substitute value, dependent upon supply voltage (12V, 24V)
Behaviour error lamp: permanent light
Selfhealing: yes
Signal Priority: 3
Measurement @ errortime: actual value

23 / 168 / BattCDSysReac

Error description BATTERY VOLTAGE
Battery voltage: the voltage measured by ECU is out of the target range; the ECU activates a system reaction

Error codes
DEUTZ-Errorcode: 23
BlinkCode (short-long-short): 3 - 1 - 8
SPN: 168
possible FMI:
2: data stream is defective
2: data stream is defective
12. Errormode not identifiable
12. Errormode not identifiable

Errordetection
Errorlamp shows permanent light. Entry in errormemory.

Possible reason for error
Above target range with system reaction, too high power supply voltage, parametering inaccurate, ECU defective

Take actions for error repair
Check dataset of calibration of working voltage for application, check LIMA? Check voltage of generator, check the parameters and if necessary correct them, replace ECU

other error properties
System reaction: Warning
Behaviour error lamp: permanent light
Selfhealing: yes
Signal Priority: 4
Measurement @ errortime: actual value

24 / 523561 / BIPCyl1

Error description INJECT. PERIOD ZYL.1
Begin of injection of cylinder 1: the ECU can not identify the magnet valve or the injection pump with the measured value of current drain at the begin of the injection

Error codes
DEUTZ-Errorcode: 24
BlinkCode (short-long-short): 5 - 3 - 1
SPN: 523561
possible FMI:
2: data stream is defective
2: data stream is defective
2: data stream is defective
2: data stream is defective

Errordetection
Errorlamp shows permanent light. Entry in errormemory.

Possible reason for error
Value outside target range or missing (cylinder 1), magnet valve or injection pump defective

Take actions for error repair
Check magnetic valve or injection pump and if necessary change them

other error properties
System reaction: No function at the moment/ Allocation check cylinder!
Behaviour error lamp: permanent light
Selfhealing: yes
Signal Priority: 3
Measurement @ errortime: actual value

25 / 523562 / BIPCyl2

Error description INJECT. PERIOD ZYL.2
Begin of injection of cylinder 2: the ECU can not identify the magnet valve or the injection pump with the measured value of current drain at the begin of the injection

Error codes
DEUTZ-Errorcode: 25
BlinkCode (short-long-short): 5 - 3 - 2
SPN: 523562
possible FMI:
2: data stream is defective
2: data stream is defective
2: data stream is defective
2: data stream is defective

Errordetection
Errorlamp shows permanent light. Entry in errormemory.

Possible reason for error
Value outside target range or missing (cylinder 2), magnet valve or injection pump defective

Take actions for error repair
Check magnetic valve or injection pump and if necessary change them

other error properties
System reaction: No function at the moment/ Allocation check cylinder!
Behaviour error lamp: permanent light
Selfhealing: yes
Signal Priority: 3
Measurement @ errortime: actual value

26 / 523563 / BIPCyl3

Error description INJECT. PERIOD ZYL.3
Begin of injection of cylinder 3: the ECU can not identify the magnet valve or the injection pump with the measured value of current drain at the begin of the injection

Error codes
DEUTZ-Errorcode: 26
BlinkCode (short-long-short): 5 - 3 - 3
SPN: 523563
possible FMI:
2: data stream is defective
2: data stream is defective
2: data stream is defective
2: data stream is defective

Errordetection
Errorlamp shows permanent light. Entry in errormemory.

Possible reason for error
Value outside target range or missing (cylinder 3), magnet valve or injection pump defective

Take actions for error repair
Check magnetic valve or injection pump and if necessary change them

other error properties
System reaction: No function at the moment/ Allocation check cylinder!
Behaviour error lamp: permanent light
Selfhealing: yes
Signal Priority: 3
Measurement @ errortime: actual value

27 / 523564 / BIPCyl4

Error description INJECT. PERIOD ZYL.4
Begin of injection of cylinder 4: the ECU can not identify the magnet valve or the injection pump with the measured value of current drain at the begin of the injection

Error codes
DEUTZ-Errorcode: 27
BlinkCode (short-long-short): 5 - 3 - 4
SPN: 523564
possible FMI:
2: data stream is defective
2: data stream is defective
2: data stream is defective
2: data stream is defective

Errordetection
Errorlamp shows permanent light. Entry in errormemory.

Possible reason for error
Value outside target range or missing (cylinder 4), magnet valve or injection pump defective

Take actions for error repair
d

other error properties
System reaction: No function at the moment/ Allocation check cylinder!
Behaviour error lamp: permanent light
Selfhealing: yes
Signal Priority: 3
Measurement @ errortime: actual value

28 / 523565 / BIPCyl5

Error description INJECT. PERIOD ZYL.5
Begin of injection of cylinder 5: the ECU can not identify the magnet valve or the injection pump with the measured value of current drain at the begin of the injection

Error codes
DEUTZ-Errorcode: 28
BlinkCode (short-long-short): 5 - 3 - 5
SPN: 523565
possible FMI:
2: data stream is defective
2: data stream is defective
2: data stream is defective
2: data stream is defective

Errordetection
Errorlamp shows permanent light. Entry in errormemory.

Possible reason for error
Value outside target range or missing (cylinder 5), magnet valve or injection pump defective

Take actions for error repair
Check magnetic valve or injection pump and if necessary change them

other error properties
System reaction: No function at the moment/ Allocation check cylinder!
Behaviour error lamp: permanent light
Selfhealing: yes
Signal Priority: 3
Measurement @ errortime: actual value

29 / 523566 / BIPCyl6

Error description INJECT. PERIOD ZYL.6
Begin of injection of cylinder 6: the ECU can not identify the magnet valve or the injection pump with the measured value of current drain at the begin of the injection

Error codes
DEUTZ-Errorcode: 29
BlinkCode (short-long-short): 5 - 3 - 6
SPN: 523566
possible FMI:
2: data stream is defective
2: data stream is defective
2: data stream is defective
2: data stream is defective

Errordetection
Errorlamp shows permanent light. Entry in errormemory.

Possible reason for error
Value outside target range or missing (cylinder 6), magnet valve or injection pump defective

Take actions for error repair
Check magnetic valve or injection pump and if necessary change them

other error properties
System reaction: No function at the moment/ Allocation check cylinder!
Behaviour error lamp: permanent light
Selfhealing: yes
Signal Priority: 3
Measurement @ errortime: actual value

30 / 523567 / BIPCyl7

Error description INJECT. PERIOD ZYL.7
Begin of injection of cylinder 7: the ECU can not identify the magnet valve or the injection pump with the measured value of current drain at the begin of the injection

Error codes
DEUTZ-Errorcode: 30
BlinkCode (short-long-short): 5 - 3 - 7
SPN: 523567
possible FMI:
2: data stream is defective
2: data stream is defective
2: data stream is defective
2: data stream is defective

Errordetection
Errorlamp shows permanent light. Entry in errormemory.

Possible reason for error
Value outside target range or missing (cylinder 7), magnet valve or injection pump defective

Take actions for error repair
Check magnetic valve or injection pump and if necessary change them

other error properties
System reaction: No function at the moment/ Allocation check cylinder!
Behaviour error lamp: permanent light
Selfhealing: yes
Signal Priority: 3
Measurement @ errortime: actual value

31 / 523568 / BIPCyl8

Error description INJECT. PERIOD ZYL.8

Begin of injection of cylinder 8: the ECU can not identify the magnet valve or the injection pump with the measured value of current drain at the begin of the injection

Error codes

DEUTZ-Errorcode: 31
BlinkCode (short-long-short): 5 - 3 - 8
SPN: 523568
possible FMI:
2: data stream is defective
2: data stream is defective
2: data stream is defective
2: data stream is defective

Errordetection

Errorlamp shows permanent light. Entry in errormemory.

Possible reason for error

Value outside target range or missing (cylinder 8), magnet valve or injection pump defective

Take actions for error repair

Check magnetic valve or injection pump and if necessary change them

other error properties

System reaction: No function at the moment/ Allocation check cylinder!
Behaviour error lamp: permanent light
Selfhealing: yes
Signal Priority: 3
Measurement @ errortime: actual value

32 / 102 / BPSCD

Error description CHARGE AIR PRESS.

Charge air pressure sensor: the measured voltage of sensor by ECU is out of the target range; the calculated charge air pressure is implausible or the received value via CAN is defective

Error codes

DEUTZ-Errorcode: 32
BlinkCode (short-long-short): 2 - 2 - 3
SPN: 102
possible FMI:
3: Voltage to high or short circuit to +Ubatt
4: Voltage to low or short circuit to -Ubatt
2: data stream is defective
2: data stream is defective

Errordetection

Errorlamp shows permanent light. Entry in errormemory.

Possible reason for error

Cable break or short circuit, sensor defective, onnection cable demaged

Take actions for error repair

Check cabling, if LDF6T sensor not working, check sensor and if necessary replace it, check connection cable and if necessary repair or replace it

other error properties

System reaction: Warning, substitute value
Behaviour error lamp: permanent light
Selfhealing: yes
Signal Priority: 4
Measurement @ errortime: default value

33 / 102 / BPSCDSysReac

Error description CHARGE AIR PRESS.

Charge air pressure: the charge air pressure calculated by ECU is above the target range; the ECU activates a system reaction

Error codes

DEUTZ-Errorcode: 33
BlinkCode (short-long-short): 2 - 2 - 3
SPN: 102
possible FMI:
2: data stream is defective
2: data stream is defective
12. Errormode not identifiable
12. Errormode not identifiable

Errordetection

Errorlamp shows permanent light
oder
blinking. Entry in errormemory.

Possible reason for error

Outside target range with system reaction, air system demaged, sensor defective, onnection cable demaged

Take actions for error repair

Check air system, inspect air system and if necessary repair it, check sensor and if necessary replace it, check connection cable and if necessary repair or replace it

other error properties

System reaction: Advice: BPSCD_stSysReacReq
Behaviour error lamp: permanent light
oder
blinking
Selfhealing: yes
Signal Priority: 4
Measurement @ errortime: actual value

37 / 111 / CLSCDSysReac

Error description ENG COOLANT LEVEL
Coolant level: the coolant level calculated by ECU is underneath the allowed minimum

Error codes
DEUTZ-Errorcode: 37
BlinkCode (short-long-short): 2 - 3 - 5
SPN: 111
possible FMI:
1: data valid, but below normal working area
1: data valid, but below normal working area
12. Errormode not identifiable
12. Errormode not identifiable

Errordetection
Errorlamp shows permanent light
oder
blinking. Entry in errormemory.

Possible reason for error
Outside target range with system reaction, cooling system untight, sensor defective, onnection cable demaged

Take actions for error repair
Check coolant level, check cabling, inspect cooling system and if necessary repair it, check sensor and if necessary replace it, check connection cable and if necessary repair or replace it

other error properties
System reaction: Advice: CLSCD_stSysReacReq
Behaviour error lamp: permanent light
oder
blinking
Selfhealing: no
Signal Priority: 3
Measurement @ errortime: actual value

38 / 1323 / CmbChbMisfire1

Error description MISFIRE CYL. 1
Misfire at cylinder 1: the number of the misfire detected by ECU is out of the allowed limit value

Error codes
DEUTZ-Errorcode: 38
BlinkCode (short-long-short): 2 - 4 - 1
SPN: 1323
possible FMI:
12: Defective component
12. Errormode not identifiable
12. Errormode not identifiable
12. Errormode not identifiable

Errordetection
Errorlamp shows permanent light. Entry in errormemory.

Possible reason for error
Misfire detected (cylinder 1), magnet valve or injection pump defective, fuel system defective, motor engineering demaged

Take actions for error repair
Check magnetic valve or injection pump and if necessary replace them, check fuel system and if necessary repair it, check motor engineering and if necessary repair it

other error properties
System reaction:
Behaviour error lamp: permanent light
Selfhealing: no
Signal Priority: 0
Measurement @ errortime: actual value

39 / 1324 / CmbChbMisfire2

Error description MISFIRE CYL. 2
Misfire at cylinder 2: the number of the misfire detected by ECU is out of the allowed limit value

Error codes
DEUTZ-Errorcode: 39
BlinkCode (short-long-short): 2 - 4 - 1
SPN: 1324
possible FMI:
12: Defective component
12. Errormode not identifiable
12. Errormode not identifiable
12. Errormode not identifiable

Errordetection
Errorlamp shows permanent light. Entry in errormemory.

Possible reason for error
Misfire detected (cylinder 2), magnet valve or injection pump defective, fuel system defective, motor engineering demaged

Take actions for error repair
Check magnetic valve or injection pump and if necessary replace them, check fuel system and if necessary repair it, check motor engineering and if necessary repair it

other error properties
System reaction:
Behaviour error lamp: permanent light
Selfhealing: no
Signal Priority: 0
Measurement @ errortime: actual value

40 / 1325 / CmbChbMisfire3

Error description MISFIRE CYL. 3
Misfire at cylinder 3: the number of the misfire detected by ECU is out of the allowed limit value

Error codes
DEUTZ-Errorcode: 40
BlinkCode (short-long-short): 2 - 4 - 1
SPN: 1325
possible FMI:
12: Defective component
12. Errormode not identifiable
12. Errormode not identifiable
12. Errormode not identifiable

Errordetection
Errorlamp shows permanent light. Entry in errormemory.

Possible reason for error
Misfire detected (cylinder 3), magnet valve or injection pump defective, fuel system defective, motor engineering demaged

Take actions for error repair
Check magnetic valve or injection pump and if necessary replace them, check fuel system and if necessary repair it, check motor engineering and if necessary repair it

other error properties
System reaction:
Behaviour error lamp: permanent light
Selfhealing: no
Signal Priority: 0
Measurement @ errortime: actual value

41 / 1326 / CmbChbMisfire4

Error description MISFIRE CYL. 4
Misfire at cylinder 4: the number of the misfire detected by ECU is out of the allowed limit value

Error codes
DEUTZ-Errorcode: 41
BlinkCode (short-long-short): 2 - 4 - 1
SPN: 1326
possible FMI:
12: Defective component
12. Errormode not identifiable
12. Errormode not identifiable
12. Errormode not identifiable

Errordetection
Errorlamp shows permanent light. Entry in errormemory.

Possible reason for error
Misfire detected (cylinder 4), magnet valve or injection pump defective, fuel system defective, motor engineering demaged

Take actions for error repair
Check magnetic valve or injection pump and if necessary replace them, check fuel system and if necessary repair it, check motor engineering and if necessary repair it

other error properties
System reaction:
Behaviour error lamp: permanent light
Selfhealing: no
Signal Priority: 0
Measurement @ errortime: actual value

42 / 1327 / CmbChbMisfire5

Error description MISFIRE CYL. 5
Misfire at cylinder 5: the number of the misfire detected by ECU is out of the allowed limit value

Error codes
DEUTZ-Errorcode: 42
BlinkCode (short-long-short): 2 - 4 - 1
SPN: 1327
possible FMI:
12: Defective component
12. Errormode not identifiable
12. Errormode not identifiable
12. Errormode not identifiable

Errordetection
Errorlamp shows permanent light. Entry in errormemory.

Possible reason for error
Misfire detected (cylinder 5), magnet valve or injection pump defective, fuel system defective, motor engineering demaged

Take actions for error repair
Check magnetic valve or injection pump and if necessary replace them, check fuel system and if necessary repair it, check motor engineering and if necessary repair it

other error properties
System reaction:
Behaviour error lamp: permanent light
Selfhealing: no
Signal Priority: 0
Measurement @ errortime: actual value

43 / 1328 / CmbChbMisfire6

Error description MISFIRE CYL. 6

Misfire at cylinder 6: the number of the misfire detected by ECU is out of the allowed limit value

Error codes

DEUTZ-Errorcode: 43
BlinkCode (short-long-short): 2 - 4 - 1
SPN: 1328
possible FMI:
12: Defective component
12. Errormode not identifiable
12. Errormode not identifiable
12. Errormode not identifiable

Errordetection

Errorlamp shows permanent light. Entry in errormemory.

Possible reason for error

Misfire detected (cylinder 6), magnet valve or injection pump defective, fuel system defective, motor engineering demaged

Take actions for error repair

Check magnetic valve or injection pump and if necessary replace them, check fuel system and if necessary repair it, check motor engineering and if necessary repair it

other error properties

System reaction:
Behaviour error lamp: permanent light
Selfhealing: no
Signal Priority: 0
Measurement @ errortime: actual value

44 / 1450 / CmbChbMisfire7

Error description MISFIRE CYL. 7

Misfire at cylinder 7: the number of the misfire detected by ECU is out of the allowed limit value

Error codes

DEUTZ-Errorcode: 44
BlinkCode (short-long-short): 2 - 4 - 1
SPN: 1450
possible FMI:
12: Defective component
12. Errormode not identifiable
12. Errormode not identifiable
12. Errormode not identifiable

Errordetection

Errorlamp shows permanent light. Entry in errormemory.

Possible reason for error

Misfire detected (cylinder 7), magnet valve or injection pump defective, fuel system defective, motor engineering demaged

Take actions for error repair

Check magnetic valve or injection pump and if necessary replace them, check fuel system and if necessary repair it, check motor engineering and if necessary repair it

other error properties

System reaction:
Behaviour error lamp: permanent light
Selfhealing: no
Signal Priority: 0
Measurement @ errortime: actual value

45 / 1451 / CmbChbMisfire8

Error description MISFIRE CYL. 8

Misfire at cylinder 8: the number of the misfire detected by ECU is out of the allowed limit value

Error codes

DEUTZ-Errorcode: 45
BlinkCode (short-long-short): 2 - 4 - 1
SPN: 1451
possible FMI:
12: Defective component
12. Errormode not identifiable
12. Errormode not identifiable
12. Errormode not identifiable

Errordetection

Errorlamp shows permanent light. Entry in errormemory.

Possible reason for error

Misfire detected (cylinder 8), magnet valve or injection pump defective, fuel system defective, motor engineering demaged

Take actions for error repair

Check magnetic valve or injection pump and if necessary replace them, check fuel system and if necessary repair it, check motor engineering and if necessary repair it

other error properties

System reaction:
Behaviour error lamp: permanent light
Selfhealing: no
Signal Priority: 0
Measurement @ errortime: actual value

46 / 1322 / CmbChbMisfireMul

Error description MULTIPL. CYL. MISFIRE
Misfire at more cylinders: the number of the misfire detected by ECU is out of the allowed limit value

Error codes
DEUTZ-Errorcode: 46
BlinkCode (short-long-short): 2 - 4 - 1
SPN: 1322
possible FMI:
12: Defective component
12. Errormode not identifiable
12. Errormode not identifiable
12. Errormode not identifiable

Errordetection
Errorlamp shows permanent light. Entry in errormemory.

Possible reason for error
Misfire detected, magnet valve or injection pump defective, fuel system defective, motor engineering demaged

Take actions for error repair
Check magnetic valve or injection pump and if necessary replace them, check fuel system and if necessary repair it, check motor engineering and if necessary repair it

other error properties
System reaction:
Behaviour error lamp: permanent light
Selfhealing: no
Signal Priority: 0
Measurement @ errortime: actual value

47 / 1346 / CmbChbSysReac

Error description MISFIRE SYST. REACT
Misfire at more cylinders: the number of the misfire detected by ECU is out of the allowed limit value; the ECU activates a system reaction

Error codes
DEUTZ-Errorcode: 47
BlinkCode (short-long-short): 2 - 4 - 1
SPN: 1346
possible FMI:
0: data valid, but above normal working area
12. Errormode not identifiable
12. Errormode not identifiable
12. Errormode not identifiable

Errordetection
Errorlamp shows permanent light. Entry in errormemory.

Possible reason for error
Misfire detected with system reaction, magnet valve or injection pump defective, fuel system defective, motor engineering demaged

Take actions for error repair
Check magnetic valve or injection pump and if necessary replace them, check fuel system and if necessary repair it, check motor engineering and if necessary repair it

other error properties
System reaction:
Behaviour error lamp: permanent light
Selfhealing: no
Signal Priority: 0
Measurement @ errortime: actual value

48 / 1109 / CoEngShOffDemIgr

Error description SHUT OFF REQUEST
Request of engine off: the operator ignors the engine off request within an allowed period.

Error codes
DEUTZ-Errorcode: 48
BlinkCode (short-long-short): 3 - 4 - 1
SPN: 1109
possible FMI:
2: data stream is defective
12. Errormode not identifiable
12. Errormode not identifiable
12. Errormode not identifiable

Errordetection
Errorlamp shows permanent light. Entry in errormemory.

Possible reason for error
Shut-off request ignored by operator

Take actions for error repair
Warranty relevant

other error properties
System reaction: Warning
Behaviour error lamp: permanent light
Selfhealing: no
Signal Priority: 4
Measurement @ errortime: actual value

52 / 1072 / CRERCD

Error description ENGINE BRAKE INT.
Engine brake actuator (internal): the current drain measured by ECU is out of the target range or the maximum permissble temperature of the ECU component for power supply of the actuator is exceeded.

Error codes
DEUTZ-Errorcode: 52
BlinkCode (short-long-short): 5 - 2 - 8
SPN: 1072
possible FMI:
3: Voltage to high or short circuit to +Ubatt
4: Voltage to low or short circuit to -Ubatt
5: current to low or broken wire
12. Errormode not identifiable

Errordetection
Errorlamp shows permanent light. Entry in errormemory.

Possible reason for error
cable break or short circuit, sensor defective, connection cable demaged

Take actions for error repair
Check actuator and if necessary replace it, check connection cable and if necessary repaire or replace it

other error properties
System reaction: Warning, shutoff output, capacity reduction via second topcurve?
Behaviour error lamp: permanent light
Selfhealing: no
Signal Priority: 2
Measurement @ errortime: setpoint for output status

53 / 1081 / CSLpCD

Error description PREHEAT LAMP
Indicator lamp of air heater relay: the current drain measured by ECU is out of the target range or the maximum permissble temperature of the ECU component for power supply of the lamp is exceeded

Error codes
DEUTZ-Errorcode: 53
BlinkCode (short-long-short): 3 - 2 - 8
SPN: 1081
possible FMI:
3: Voltage to high or short circuit to +Ubatt
4: Voltage to low or short circuit to -Ubatt
5: current to low or broken wire
2: data stream is defective

Errordetection
Errorlamp shows permanent light. Entry in errormemory.

Possible reason for error
Cable break or short circuit, lamp defective, connection cable demaged

Take actions for error repair
Check cabling and load, check lamp and if necessary replace it, check connection cable and if necessary repair or replace it

other error properties
System reaction: Warning, shutoff output
Behaviour error lamp: permanent light
Selfhealing: no
Signal Priority: 1
Measurement @ errortime: setpoint for output status

54 / 704 / CTLpCD

Error description TEMP. LAMP
Warning lamp for coolant temperature: the current drain measured by ECU is out of the target range or the maximum temperature of the ECU component for power supply of the lamp is exceeded

Error codes
DEUTZ-Errorcode: 54
BlinkCode (short-long-short): 1 - 2 - 3
SPN: 704
possible FMI:
12. Errormode not identifiable
12. Errormode not identifiable
12. Errormode not identifiable
12. Errormode not identifiable

Errordetection
Errorlamp shows permanent light. Entry in errormemory.

Possible reason for error
Cable break or short circuit, lamp defective, connection cable demaged

Take actions for error repair
Check cabling and load, check lamp and if necessary replace it, check connection cable and if necessary repair or replace it

other error properties
System reaction: Warning, shutoff output
Behaviour error lamp: permanent light
Selfhealing: no
Signal Priority: 1
Measurement @ errortime: setpoint for output status

55 / 110 / CTSCD

Error description ENG COOLANT TEMP.
Coolant temperature sensor: the voltage of the sensor measured by ECU is out of the target range; the coolant temperature calculated by ECU is implausible compared with the oil temperature or the received value via CAN is defective

Error codes
DEUTZ-Errorcode: 55
BlinkCode (short-long-short): 2 - 2 - 5
SPN: 110
possible FMI:
3: Voltage to high or short circuit to +Ubatt
4: Voltage to low or short circuit to -Ubatt
2: data stream is defective
2: data stream is defective

Errordetection
Errorlamp shows permanent light. Entry in errormemory.

Possible reason for error
Cable break or short circuit, lamp defective, connection cable demaged

Take actions for error repair
Check cabling, sensor defect, check sensor and if necessary replace it, check connection cable and if necessary repair or replace it

other error properties
System reaction: Warning, substitute value
Behaviour error lamp: permanent light
Selfhealing: yes
Signal Priority: 4
Measurement @ errortime: default value

56 / 110 / CTSCDSysReac

Error description ENG COOLANT TEMP.
Coolant temperature: the coolant temperature calculated by ECU is above the target range; the ECU activates a system reaction

Error codes
DEUTZ-Errorcode: 56
BlinkCode (short-long-short): 2 - 3 - 2
SPN: 110
possible FMI:
0: data valid, but above normal working area
0: data valid, but above normal working area
12. Errormode not identifiable
12. Errormode not identifiable

Errordetection
Errorlamp shows permanent light
oder
blinking. Entry in errormemory.

Possible reason for error
Outside target range with system reaction, cooling system not enough to be filled, clogged or demaged, cooling compressor dropped out, sensor defective, onnection cable demaged

Take actions for error repair
Check cycle cooling system and compressor, inspect cooling system and if necessary repair it, check cooling compressor and if necessary replace it, check sensor and if necessary replace it, check connection cable and if necessary repair or replace it

other error properties
System reaction: Advice: CTSCD_stSysReacReq
Behaviour error lamp: permanent light
oder
blinking
Selfhealing: yes
Signal Priority: 4
Measurement @ errortime: actual value

57 / 701 / Dummy1CD_Max

Error description RESERVE 2
Reserve output 1: the ECU detects a short circuit to battery

Error codes
DEUTZ-Errorcode: 57
BlinkCode (short-long-short): 1 - 0 - 0
SPN: 701
possible FMI:
12. Errormode not identifiable
12. Errormode not identifiable
12. Errormode not identifiable
12. Errormode not identifiable

Errordetection
Errorlamp shows permanent light. Entry in errormemory.

Possible reason for error
Short circuit to Ubatt (output 1), connection cable demaged

Take actions for error repair
Check connection cable and if necessary repair or replace it

other error properties
System reaction: Warning, shutoff output
Behaviour error lamp: permanent light
Selfhealing: no
Signal Priority: 1
Measurement @ errortime: shut off value

58 / 701 / Dummy1CD_Min

Error description RESERVE 2
Reserve output 1: the ECU detects a short circuit to ground
Error codes
DEUTZ-Errorcode: 58
BlinkCode (short-long-short): 1 - 0 - 0
SPN: 701
possible FMI:
12. Errormode not identifiable
12. Errormode not identifiable
12. Errormode not identifiable
12. Errormode not identifiable
Errordetection
Errorlamp shows permanent light. Entry in errormemory.
Possible reason for error
Short circuit to ground (output 1), connection cable demaged
Take actions for error repair
Check connection cable and if necessary repair or replace it
other error properties
System reaction: Warning, shutoff output
Behaviour error lamp: permanent light
Selfhealing: no
Signal Priority: 1
Measurement @ errortime: shut off value

59 / 701 / Dummy1CD_SigNpl

Error description RESERVE 2
Reserve output 1: the ECU detects no load or excess temperature of the ECU component for power supply of the connected components
Error codes
DEUTZ-Errorcode: 59
BlinkCode (short-long-short): 1 - 0 - 0
SPN: 701
possible FMI:
12. Errormode not identifiable
12. Errormode not identifiable
12. Errormode not identifiable
12. Errormode not identifiable
Errordetection
Errorlamp shows permanent light. Entry in errormemory.
Possible reason for error
Cable break or ECU internal error (output 1), connection cable demaged, connected components defective, parametering of the output inaccurate, ECU defective
Take actions for error repair
Check connection cable and if necessary repair or replace it, check parameters and if necessary correct it, replace ECU
other error properties
System reaction: Warning, shutoff output
Behaviour error lamp: permanent light
Selfhealing: no
Signal Priority: 1
Measurement @ errortime: shut off value

60 / 702 / Dummy2CD_Max

Error description THRUST MODE
Reserve output 2: the ECU detects a short circuit to battery
Error codes
DEUTZ-Errorcode: 60
BlinkCode (short-long-short): 1 - 0 - 0
SPN: 702
possible FMI:
12. Errormode not identifiable
12. Errormode not identifiable
12. Errormode not identifiable
12. Errormode not identifiable
Errordetection
Errorlamp shows permanent light. Entry in errormemory.
Possible reason for error
Short circuit to Ubatt (output 2), onnection cable demaged
Take actions for error repair
Check connection cable and if necessary repair or replace it
other error properties
System reaction: Warning, shutoff output
Behaviour error lamp: permanent light
Selfhealing: no
Signal Priority: 1
Measurement @ errortime: shut off value

61 / 702 / Dummy2CD_Min

Error description THRUST MODE
Reserve output 2: the ECU detects a short circuit to ground

Error codes
DEUTZ-Errorcode: 61
BlinkCode (short-long-short): 1 - 0 - 0
SPN: 702
possible FMI:
12. Errormode not identifiable
12. Errormode not identifiable
12. Errormode not identifiable
12. Errormode not identifiable

Errordetection
Errorlamp shows permanent light. Entry in errormemory.

Possible reason for error
Short circuit to ground (output 2), connection cable demaged

Take actions for error repair
Check connection cable and if necessary repair or replace it

other error properties
System reaction: Warning, shutoff output
Behaviour error lamp: permanent light
Selfhealing: no
Signal Priority: 1
Measurement @ errortime: shut off value

62 / 702 / Dummy2CD_SigNpl

Error description THRUST MODE
Reserve output 2: the ECU detects no load or excess temperature of the ECU component for power supply of the connected components

Error codes
DEUTZ-Errorcode: 62
BlinkCode (short-long-short): 1 - 0 - 0
SPN: 702
possible FMI:
12. Errormode not identifiable
12. Errormode not identifiable
12. Errormode not identifiable
12. Errormode not identifiable

Errordetection
Errorlamp shows permanent light. Entry in errormemory.

Possible reason for error
Cable break or ECU internal error (output 2), connection cable demaged, connected components defective, parametering of the output inaccurate, ECU defective

Take actions for error repair
Check connection cable and if necessary repair or replace it, check parameters and if necessary correct it, replace ECU

other error properties
System reaction: Warning, shutoff output
Behaviour error lamp: permanent light
Selfhealing: no
Signal Priority: 1
Measurement @ errortime: shut off value

69 / 2791 / EGRCD_Max

Error description EGR ACTUATOR
Actuator of the external EGR valve: the ECU detects a short circuit to battery

Error codes
DEUTZ-Errorcode: 69
BlinkCode (short-long-short): 4 - 1 - 4
SPN: 2791
possible FMI:
3: Voltage to high or short circuit to +Ubatt
12. Errormode not identifiable
12. Errormode not identifiable
12. Errormode not identifiable

Errordetection
Errorlamp shows permanent light. Entry in errormemory.

Possible reason for error
Short circuit to Ubatt, connection cable demaged

Take actions for error repair
Check cabling, sensor defect, check sensor and if necessary replace it, check connection cable and if necessary repair or replace it

other error properties
System reaction: Warning, shutoff output, power reduction via second topcurve?
Behaviour error lamp: permanent light
Selfhealing: no
Signal Priority: 3
Measurement @ errortime: shut off value

70 / 2791 / EGRCD_Min

Error description EGR ACTUATOR
Actuator of the external EGR valve: the ECU detects a short circuit to ground

Error codes
DEUTZ-Errorcode: 70
BlinkCode (short-long-short): 4 - 1 - 4
SPN: 2791
possible FMI:
12. Errormode not identifiable
4: Voltage to low or short circuit to -Ubatt
12. Errormode not identifiable
12. Errormode not identifiable

Errordetection
Errorlamp shows permanent light. Entry in errormemory.

Possible reason for error
Short circuit to ground, connection cable demaged

Take actions for error repair
Check cabling, sensor defect, check sensor and if necessary replace it, check connection cable and if necessary repair or replace it

other error properties
System reaction: Warning, shutoff output, power reduction via second topcurve?
Behaviour error lamp: permanent light
Selfhealing: no
Signal Priority: 3
Measurement @ errortime: shut off value

71 / 2791 / EGRCD_SigNpl

Error description EGR ACTUATOR
Actuator of the external EGR valve: the ECU detects no load or excess temperature of the ECU component for power supply of the connected components

Error codes
DEUTZ-Errorcode: 71
BlinkCode (short-long-short): 4 - 1 - 5
SPN: 2791
possible FMI:
12. Errormode not identifiable
12. Errormode not identifiable
5: current to low or broken wire
2: data stream is defective

Errordetection
Errorlamp shows permanent light. Entry in errormemory.

Possible reason for error
Cable break or excess temperature, sensor defective, connection cable demaged

Take actions for error repair
Check cabling, sensor defect, check sensor and if necessary replace it, check connection cable and if necessary repair or replace it

other error properties
System reaction: Warning, shutoff output, power reduction via second topcurve?
Behaviour error lamp: permanent light
Selfhealing: no
Signal Priority: 3
Measurement @ errortime: shut off value

72 / 2791 / EGRCDIntEGR

Error description EGR ACTUATOR
Actuator of the internal EGR valve: the ECU detects no load or excess temperature of the ECU component for power supply of the actuator

Error codes
DEUTZ-Errorcode: 72
BlinkCode (short-long-short): 4 - 1 - 6
SPN: 2791
possible FMI:
3: Voltage to high or short circuit to +Ubatt
4: Voltage to low or short circuit to -Ubatt
5: current to low or broken wire
2: data stream is defective

Errordetection
Errorlamp shows permanent light. Entry in errormemory.

Possible reason for error
Cable break, short circuit or excess temperature, sensor defective, connection cable demaged

Take actions for error repair
Check cabling, sensor defect, check sensor and if necessary replace it, check connection cable and if necessary repair or replace it

other error properties
System reaction: Warning, shutoff output, power reduction via second topcurve?
Behaviour error lamp: permanent light
Selfhealing: no
Signal Priority: 3
Measurement @ errortime: shut off value

74 / 923 / EngCDTrqCalcOut

Error description ENGINE POWER OUT
Output with PWM signal of the engine power: the current drain measured by ECU is out of the target range or the maximum permissible temperature of the ECU component to control the output is exceeded

Error codes
DEUTZ-Errorcode: 74
BlinkCode (short-long-short): 5 - 5 - 5
SPN: 923
possible FMI:
3: Voltage to high or short circuit to +Ubatt
4: Voltage to low or short circuit to -Ubatt
5: current to low or broken wire
2: data stream is defective

Errordetection
Errorlamp shows permanent light. Entry in errormemory.

Possible reason for error
Engine Power output: cable break or short circuit, output defective, connection cable demaged

Take actions for error repair
Check cabling, sensor defect, check sensor and if necessary replace it, check connection cable and if necessary repair or replace it

other error properties
System reaction: Warning, shutoff output
Behaviour error lamp: permanent light
Selfhealing: no
Signal Priority: 1
Measurement @ errortime: shut off value

75 / 190 / EngMBackUp

Error description ENGINE SPEED
Crankschaft speed sensor: the ECU receives no signal and uses the signal from camschaft speed sensor as alternative to calculate the engine speed

Error codes
DEUTZ-Errorcode: 75
BlinkCode (short-long-short): 2 - 1 - 2
SPN: 190
possible FMI:
12. Errormode not identifiable
12: Defective component
12. Errormode not identifiable
12. Errormode not identifiable

Errordetection
Errorlamp shows permanent light. Entry in errormemory.

Possible reason for error
Engine running only with cam-shaft speed signal, transmitter defective, connection cable demaged

Take actions for error repair
Check cabling of crankschaft sensor, check crankschaft sensor and if necessary replace it, check connection cable and if necessary repair or replace it

other error properties
System reaction: Warning, calculation of injektion initation point will be incorrect
Behaviour error lamp: permanent light
Selfhealing: yes
Signal Priority: 3
Measurement @ errortime: -

76 / 190 / EngMCaS1

Error description ENGINE SPEED
Camschaft speed sensor: the ECU receives no signal or the signal is defective

Error codes
DEUTZ-Errorcode: 76
BlinkCode (short-long-short): 2 - 1 - 2
SPN: 190
possible FMI:
12: Defective component
8: unusual frequency, pulse or period.
12. Errormode not identifiable
12. Errormode not identifiable

Errordetection
Errorlamp shows permanent light. Entry in errormemory.

Possible reason for error
Speed signal from cam-shaft defectiveiv or missing, transmitter defective, connection cable demaged, parametering of the sensor wheel inaccurate

Take actions for error repair
Check cabling, check camschaft sensor and if necessary replace it, check configuration of sensor wheel, check connection cable and if necessary repair or replace it, check parameters and if necessary correct them

other error properties
System reaction: Warning, difficult start
Behaviour error lamp: permanent light
Selfhealing: yes
Signal Priority: 4
Measurement @ errortime: 0

77 / 190 / EngMCrS1

Error description ENGINE SPEED
Crankschaft speed sensor: the ECU receives no signal or the signal is defective

Error codes
DEUTZ-Errorcode: 77
BlinkCode (short-long-short): 2 - 1 - 2
SPN: 190
possible FMI:
12: Defective component
8: unusual frequency, pulse or period.
12. Errormode not identifiable
12. Errormode not identifiable

Errordetection
Errorlamp shows permanent light. Entry in errormemory.

Possible reason for error
Speed signal from crankshaft defectiveiv or missing, transmitter defective, connection cable demaged, sensor wheel installed inaccurately

Take actions for error repair
Check cabling, check camschaft sensor and if necessary replace it, check configuration of sensor wheel, check connection cable and if necessary repair or replace it, check the position of sensor wheel and if necessary correct it

other error properties
System reaction: Warning, power reduction via second topcurve
Behaviour error lamp: permanent light
Selfhealing: yes
Signal Priority: 4
Measurement @ errortime: 0

78 / 190 / EngMOfsCaSCrS

Error description ENGINE SPEED
Speed sensor of crankschaft and camschaft: the received signals are out of phase

Error codes
DEUTZ-Errorcode: 78
BlinkCode (short-long-short): 2 - 1 - 3
SPN: 190
possible FMI:
2: data stream is defective
12. Errormode not identifiable
12. Errormode not identifiable
12. Errormode not identifiable

Errordetection
Errorlamp shows permanent light. Entry in errormemory.

Possible reason for error
Speed signals of crank-shaft and cam-shaft are phase-shifted, sensor wheel installed in wrong position, sensor wrong wired

Take actions for error repair
Check position from crankschaft sensor wheel to camschaft sensor wheel, polarisation crankschaft or camschaft sensor, check position of sensor wheel and if necessary correct it, check cabling and if necessary correct it

other error properties
System reaction: Warning, not possible to start engine
Behaviour error lamp: permanent light
Selfhealing: no
Signal Priority: 4
Measurement @ errortime: -

79 / 190 / EngPrtSysReacFOC

Error description ENGINE SPEED
Engine speed: the engine speed calculated by ECU is above the target range; the ECU activates a system reaction

Error codes
DEUTZ-Errorcode: 79
BlinkCode (short-long-short): 2 - 1 - 4
SPN: 190
possible FMI:
0: data valid, but above normal working area
12. Errormode not identifiable
12. Errormode not identifiable
12. Errormode not identifiable

Errordetection
Errorlamp shows blinking. Entry in errormemory.

Possible reason for error
Engine overspeed detected with system reaction, maximum engine speed exceeded

Take actions for error repair

other error properties
System reaction:
Behaviour error lamp: blinking
Selfhealing: no
Signal Priority: 5
Measurement @ errortime: actual value

80 / 190 / EngPrtSysReacORC

Error description ENGINE SPEED

Engine speed: under overrun conditions, the engine speed calculated by ECU is above the target range; the ECU activates a system reaction

Error codes

DEUTZ-Errorcode: 80
BlinkCode (short-long-short): 2 - 1 - 4
SPN: 190
possible FMI:
14: Special Instructions
12. Errormode not identifiable
12. Errormode not identifiable
12. Errormode not identifiable

Errordetection

Errorlamp shows permanent light. Entry in errormemory.

Possible reason for error

Overrun conditions detected with system reaction, maximum engine speed exceeded

Take actions for error repair

other error properties

System reaction:
Behaviour error lamp: permanent light
Selfhealing: yes
Signal Priority: 4
Measurement @ errortime: actual value

81 / 703 / ESLpCD

Error description ENG. RUNNING LAMP

Indicator lamp for engine running: the current drain measured by ECU is out of the target range or the maximum permissible temperature of the ECU component for power supply of the lamp is exceeded

Error codes

DEUTZ-Errorcode: 81
BlinkCode (short-long-short): 1 - 4 - 2
SPN: 703
possible FMI:
3: Voltage to high or short circuit to +Ubatt
4: Voltage to low or short circuit to -Ubatt
5: current to low or broken wire
2: data stream is defective

Errordetection

Errorlamp shows permanent light. Entry in errormemory.

Possible reason for error

Cable break or internal ECU error, lamp defective, connection cable demaged

Take actions for error repair

Check cabling and load, check lamp and if necessary replace it, check connection cable and if necessary repair or replace it

other error properties

System reaction: Warning, shutoff output
Behaviour error lamp: permanent light
Selfhealing: no
Signal Priority: 1
Measurement @ errortime: shut off value

82 / 1074 / ExFlCD

Error description BRAKE FLAP ACTUATOR

Engine brake flap actuator: the current drain measured by ECU is out of the target range or the maximum permissible temperature of the ECU component for power supply of the actuator is exceeded

Error codes

DEUTZ-Errorcode: 82
BlinkCode (short-long-short): 2 - 1 - 9
SPN: 1074
possible FMI:
3: Voltage to high or short circuit to +Ubatt
4: Voltage to low or short circuit to -Ubatt
5: current to low or broken wire
12. Errormode not identifiable

Errordetection

Errorlamp shows permanent light. Entry in errormemory.

Possible reason for error

Engine brake flap actuator: cable break or short circuit, sensor defective, connection cable demaged

Take actions for error repair

Check cabling, sensor defect, check sensor and if necessary replace it, check connection cable and if necessary repair or replace it

other error properties

System reaction: Warning, shutoff output
Behaviour error lamp: permanent light
Selfhealing: no
Signal Priority: 2
Measurement @ errortime: shut off value

83 / 975 / FanCD

Error description FAN ACTUATOR

Fan power stage: the current drain measured by ECU is out of the target range or the maximum permissible temperature of the ECU component for power supply of the actuator is exceeded

Error codes

DEUTZ-Errorcode: 83
BlinkCode (short-long-short): 2 - 3 - 8
SPN: 975
possible FMI:
3: Voltage to high or short circuit to +Ubatt
4: Voltage to low or short circuit to -Ubatt
5: current to low or broken wire
2: data stream is defective

Errordetection

Errorlamp shows permanent light. Entry in errormemory.

Possible reason for error

cable break or short circuit, sensor defective, connection cable demaged

Take actions for error repair

Check cabling, sensor defect, check sensor and if necessary replace it, check connection cable and if necessary repair or replace it

other error properties

System reaction: Warning, shutoff output
Behaviour error lamp: permanent light
Selfhealing: no
Signal Priority: 2
Measurement @ errortime: Sollwert

85 / 1639 / FanCDEval

Error description

Fan speed sensor: the current drain measured by ECU is out of the target range

Error codes

DEUTZ-Errorcode: 85
BlinkCode (short-long-short): 2 - 3 - 8
SPN: 1639
possible FMI:
3: Voltage to high or short circuit to +Ubatt
4: Voltage to low or short circuit to -Ubatt
12. Errormode not identifiable
12. Errormode not identifiable

Errordetection

Errorlamp shows permanent light. Entry in errormemory.

Possible reason for error

Sensor defective, connection cable demaged, fan speed outside the target range

Take actions for error repair

Check sensor and if necessary replace it, check connectionn cable and if necessary repair or replace it, check fan

other error properties

System reaction:
Behaviour error lamp: permanent light
Selfhealing: yes
Signal Priority: 2
Measurement @ errortime: actual value

86 / 523602 / FanCDSysReac

Error description FAN SPEED

Fan speed: the fan speed calculated by ECU is above the target range; the ECU activates a system reaction

Error codes

DEUTZ-Errorcode: 86
BlinkCode (short-long-short): 2 - 3 - 8
SPN: 523602
possible FMI:
2: data stream is defective
2: data stream is defective
12. Errormode not identifiable
12. Errormode not identifiable

Errordetection

Errorlamp shows permanent light. Entry in errormemory.

Possible reason for error

Above target range with system reaction

Take actions for error repair

other error properties

System reaction:
Behaviour error lamp: permanent light
Selfhealing: yes
Signal Priority: 3
Measurement @ errortime: actual value

87 / 97 / FIFCD

Error description WATER IN FUEL
Fuel filter water level sensor: the voltage of sensor measured by ECU is out of the target range

Error codes
DEUTZ-Errorcode: 87
BlinkCode (short-long-short): 2 - 2 - 8
SPN: 97
possible FMI:
3: Voltage to high or short circuit to +Ubatt
4: Voltage to low or short circuit to -Ubatt
12. Errormode not identifiable
12. Errormode not identifiable

Errordetection
Errorlamp shows permanent light. Entry in errormemory.

Possible reason for error
cable break or short circuit, sensor defective, connection cable demaged

Take actions for error repair
Check cabling, if sensor not working, check sensor and if necessary replace it, check connection cable and if necessary repair or replace it

other error properties
System reaction: Warning, substitute value
Behaviour error lamp: permanent light
Selfhealing: yes
Signal Priority: 1
Measurement @ errortime: default value

89 / 97 / FIFCD_WtLvl

Error description WATER IN FUEL
Water in fuel: the water level calculated by ECU is above the allowed limit value

Error codes
DEUTZ-Errorcode: 89
BlinkCode (short-long-short): 2 - 2 - 8
SPN: 97
possible FMI:
12: Defective component
12. Errormode not identifiable
12. Errormode not identifiable
12. Errormode not identifiable

Errordetection
Errorlamp shows permanent light. Entry in errormemory.

Possible reason for error
Above target range, excess of maximum permissible water level in fuel filter

Take actions for error repair
flush water seperator

other error properties
System reaction: Warning
Behaviour error lamp: permanent light
Selfhealing: no
Signal Priority: 3
Measurement @ errortime: actual value

90 / 94 / FIPSCD

Error description FUEL PRE PRESS.
Low fuel pressure sensor: the voltage of sensor measured by ECU is out of the target range

Error codes
DEUTZ-Errorcode: 90
BlinkCode (short-long-short): 2 - 1 - 6
SPN: 94
possible FMI:
3: Voltage to high or short circuit to +Ubatt
4: Voltage to low or short circuit to -Ubatt
12. Errormode not identifiable
12. Errormode not identifiable

Errordetection
Errorlamp shows permanent light. Entry in errormemory.

Possible reason for error
cable break or short circuit, sensor defective, connection cable demaged

Take actions for error repair
Check cabling, if sensor not working, check sensor and if necessary replace it, check connection cable and if necessary repair or replace it

other error properties
System reaction: Warning, substitute value
Behaviour error lamp: permanent light
Selfhealing: yes
Signal Priority: 3
Measurement @ errortime: default value

91 / 94 / FlPSCDSysReac

Error description FUEL PRE PRESS.
Low fuel pressure: the low fuel pressure calculated by ECU is underneath the target range; the ECU activates a system reaction

Error codes
DEUTZ-Errorcode: 91
BlinkCode (short-long-short): 2 - 1 - 6
SPN: 94
possible FMI:
2: data stream is defective
2: data stream is defective
12. Errormode not identifiable
12. Errormode not identifiable

Errordetection
Errorlamp shows permanent light. Entry in errormemory.

Possible reason for error
Below target range with system reaction, interruption in cycling process of low fuel pressure (for example, fuel pump defective), sensor defective, connection cable demaged

Take actions for error repair
Check low fuel pressure loop system, Check fuel pump, inspect fuel system and if necessary repair it, check sensor and if necessary replace it, check connection cable and if necessary repair or replace it

other error properties
System reaction: Advice: FLPSCD_stSysReacReq
Behaviour error lamp: permanent light
Selfhealing: yes
Signal Priority: 3
Measurement @ errortime: actual value

94 / 523239 / FrmMngDecV1

Error description CAN ERROR DEC-V1
CAN message DecV1 (Pseudo Pedal): the message can not be received by ECU or the received value is above the target range

Error codes
DEUTZ-Errorcode: 94
BlinkCode (short-long-short): 5 - 2 - 6
SPN: 523239
possible FMI:
12: Defective component
12: Defective component
12: Defective component
2: data stream is defective

Errordetection
Errorlamp shows permanent light. Entry in errormemory.

Possible reason for error
Missing or value above target range (message "DecV1" = pseudo pedal), CAN bus wrong cabled, wiring is demaged, receiver (sender of the message) work inaccurately, parametering inaccurate

Take actions for error repair
Check CAN Bus cabling (Bus sheduling, polarity, short circuit, power interrupt), test protocol of receiver, check CAN functional range

other error properties
System reaction: Warning, changing to substitute values according to customers configuration.
Behaviour error lamp: permanent light
Selfhealing: yes
Signal Priority: 1
Measurement @ errortime: default value

95 / 523240 / FrmMngFunModCtl

Error description CAN ERROR FUNMODCTL
CAN message FunModCtl (Function Mode Control): the message can not be received by ECU

Error codes
DEUTZ-Errorcode: 95
BlinkCode (short-long-short): 5 - 2 - 7
SPN: 523240
possible FMI:
12: Defective component
12. Errormode not identifiable
12. Errormode not identifiable
12. Errormode not identifiable

Errordetection
Errorlamp shows permanent light. Entry in errormemory.

Possible reason for error
Missing message "FunModCtl" = function mode control, CAN bus wrong cabled, wiring is demaged, receiver (sender of the message) work inaccurately, parametering inaccurate

Take actions for error repair
Check CAN Bus cabling (Bus sheduling, polarity, short circuit, power interrupt), test protocol of receiver, check CAN functional range

other error properties
System reaction: Warning, changing to substitute values according to customers configuration.
Behaviour error lamp: permanent light
Selfhealing: yes
Signal Priority: 1
Measurement @ errortime: default valuee

106 / 523212 / FrmMngTOEngPrt

Error description CAN ERROR ENGPRT

CAN message EngPrt (Engine Protection): the message can not be received by ECU

Error codes

DEUTZ-Errorcode: 106
BlinkCode (short-long-short): 3 - 3 - 3
SPN: 523212
possible FMI:
12: Defective component
12. Errormode not identifiable
12: Defective component
12. Errormode not identifiable

Errordetection

Errorlamp shows permanent light. Entry in errormemory.

Possible reason for error

Missing message "EngPrt" = engine protection, CAN bus wrong cabled, wiring is demaged, receiver (sender of the message) work inaccurately, parametering inaccurate

Take actions for error repair

Check CAN Bus cabling (Bus sheduling, polarity, short circuit, power interrupt), test protocol of receiver, check CAN functional range

other error properties

System reaction: Warning. Hold last value.
Behaviour error lamp: permanent light
Selfhealing: yes
Signal Priority: 1
Measurement @ errortime: default value

110 / 523216 / FrmMngTOPrHtEnCmd

Error description CAN ERROR PRHTENCMD

CAN message PrHtEnCmd (Preheat and Engine Command): the message received can not be received by ECU

Error codes

DEUTZ-Errorcode: 110
BlinkCode (short-long-short): 3 - 3 - 7
SPN: 523216
possible FMI:
12. Errormode not identifiable
12. Errormode not identifiable
12: Defective component
12. Errormode not identifiable

Errordetection

Errorlamp shows permanent light. Entry in errormemory.

Possible reason for error

Missing message "PrHtEnCmd" = preheat and engine command; CAN bus wrong cabled, wiring is demaged, receiver (sender of the message) work inaccurately, parametering inaccurate

Take actions for error repair

Check CAN Bus cabling (Bus sheduling, polarity, short circuit, power interrupt), test protocol of receiver, check CAN functional range

other error properties

System reaction: Warning, changing to substitute values according to customers configuration.
Behaviour error lamp: permanent light
Selfhealing: yes
Signal Priority: 1
Measurement @ errortime: default valuee

112 / 523218 / FrmMngTORxCCVS

Error description CAN ERROR RXCCVS

CAN message RxCCVS (Cruise Control): the message can not be received by ECU

Error codes

DEUTZ-Errorcode: 112
BlinkCode (short-long-short): 1 - 1 - 1
SPN: 523218
possible FMI:
12. Errormode not identifiable
12. Errormode not identifiable
12: Defective component
12. Errormode not identifiable

Errordetection

Errorlamp shows permanent light. Entry in errormemory.

Possible reason for error

Missing message "RxCCVS" = cruise control; CAN bus wrong cabled, wiring is demaged, receiver (sender of the message) work inaccurately, parametering inaccurate

Take actions for error repair

Check CAN Bus cabling (Bus sheduling, polarity, short circuit, power interrupt), test protocol of receiver, check CAN functional range

other error properties

System reaction:
Behaviour error lamp: permanent light
Selfhealing: yes
Signal Priority: 1
Measurement @ errortime: default valuee

113 / 523604 / FrmMngTORxEngTemp

Error description CAN ERROR RxEngTemp

CAN message RxEngTemp (Engine Temperature): the message can not be received by ECU

Error codes

DEUTZ-Errorcode: 113
BlinkCode (short-long-short): 1 - 1 - 2
SPN: 523604
possible FMI:
12: Defective component
12. Errormode not identifiable
12. Errormode not identifiable
12. Errormode not identifiable

Errordetection

Errorlamp shows permanent light. Entry in errormemory.

Possible reason for error

Missing message "RxEngTemp" = engine temperature, CAN bus wrong cabled, wiring is demaged, receiver (sender of the message) work inaccurately, parametering inaccurate

Take actions for error repair

Check CAN Bus cabling (Bus sheduling, polarity, short circuit, power interrupt), test protocol of receiver, check CAN functional range

other error properties

System reaction:
Behaviour error lamp: permanent light
Selfhealing: yes
Signal Priority: 1
Measurement @ errortime: default value

117 / 523238 / FrmMngTOSwtOut

Error description CAN ERROR SWTOUT

CAN message SwtOut (Switching Output): the message can not be received by ECU

Error codes

DEUTZ-Errorcode: 117
BlinkCode (short-long-short): 1 - 1 - 5
SPN: 523238
possible FMI:
12: Defective component
12. Errormode not identifiable
12. Errormode not identifiable
12. Errormode not identifiable

Errordetection

Errorlamp shows permanent light. Entry in errormemory.

Possible reason for error

Missing message "SwtOut" = switch outputs, CAN bus wrong cabled, wiring is demaged, receiver (sender of the message) work inaccurately, parametering inaccurate

Take actions for error repair

Check CAN Bus cabling (Bus sheduling, polarity, short circuit, power interrupt), test protocol of receiver, check CAN functional range

other error properties

System reaction:
Behaviour error lamp: permanent light
Selfhealing: yes
Signal Priority: 1
Measurement @ errortime: default valuee

118 / 523222 / FrmMngTOTCO1

Error description CAN ERROR TCO1

CAN message "TCO1" (Speedo Signal): the message can not be received by ECU

Error codes

DEUTZ-Errorcode: 118
BlinkCode (short-long-short): 1 - 1 - 6
SPN: 523222
possible FMI:
12. Errormode not identifiable
12. Errormode not identifiable
12: Defective component
12. Errormode not identifiable

Errordetection

Errorlamp shows permanent light. Entry in errormemory.

Possible reason for error

Missing message "TCO1" = speedo signal, CAN bus wrong cabled, wiring is demaged, receiver (sender of the message) work inaccurately, parametering inaccurate

Take actions for error repair

Check CAN Bus cabling (Bus sheduling, polarity, short circuit, power interrupt), test protocol of receiver, check CAN functional range

other error properties

System reaction:
Behaviour error lamp: permanent light
Selfhealing: yes
Signal Priority: 1
Measurement @ errortime: default value

120 / 523605 / FrmMngTOTSC1AE

Error description CAN ERROR TSC1-AE

CAN message TSC1-AE (Torque/Speed Control #1 from Automatic Traction Control to Engine): the message can not be received by ECU

Error codes

DEUTZ-Errorcode: 120
BlinkCode (short-long-short): 1 - 1 - 8
SPN: 523605
possible FMI:
12: Defective component
12: Defective component
12. Errormode not identifiable
12. Errormode not identifiable

Errordetection

Errorlamp shows permanent light. Entry in errormemory.

Possible reason for error

Missing message "TSC1-AE", CAN bus wrong cabled, wiring is demaged, receiver (sender of the message) work inaccurately, parametering inaccurate

Take actions for error repair

Check CAN Bus cabling (Bus sheduling, polarity, short circuit, power interrupt), test protocol of receiver, check CAN functional range

other error properties

System reaction: Warning, changing to substitute values according to priority chain.
Behaviour error lamp: permanent light
Selfhealing: no
Signal Priority: 1
Measurement @ errortime: default value

121 / 523606 / FrmMngTOTSC1AR

Error description CAN ERROR TSC1-AR

CAN message TSC1-AR (Torque/Speed Control #1 from Automatic Traction Control to Retarder): the message can not be received by ECU

Error codes

DEUTZ-Errorcode: 121
BlinkCode (short-long-short): 1 - 1 - 9
SPN: 523606
possible FMI:
12: Defective component
12: Defective component
12. Errormode not identifiable
12. Errormode not identifiable

Errordetection

Errorlamp shows permanent light. Entry in errormemory.

Possible reason for error

Missing message "TSC1-AR", CAN bus wrong cabled, wiring is demaged, receiver (sender of the message) work inaccurately, parametering inaccurate

Take actions for error repair

Check CAN Bus cabling (Bus sheduling, polarity, short circuit, power interrupt), test protocol of receiver, check CAN functional range

other error properties

System reaction: Warning, changing to substitute values according to priority chain.
Behaviour error lamp: permanent light
Selfhealing: no
Signal Priority: 1
Measurement @ errortime: default value

122 / 523607 / FrmMngTOTSC1DE

Error description CAN ERROR TSC1-DE

CAN message TSC1-DE (Torque/Speed Control #1 from Driveline to Engine): the message can not be received by ECU

Error codes

DEUTZ-Errorcode: 122
BlinkCode (short-long-short): 1 - 1 - 8
SPN: 523607
possible FMI:
12: Defective component
12: Defective component
12. Errormode not identifiable
12. Errormode not identifiable

Errordetection

Errorlamp shows permanent light. Entry in errormemory.

Possible reason for error

Missing message "TSC1-DE", CAN bus wrong cabled, wiring is demaged, receiver (sender of the message) work inaccurately, parametering inaccurate

Take actions for error repair

Check CAN Bus cabling (Bus sheduling, polarity, short circuit, power interrupt), test protocol of receiver, check CAN functional range

other error properties

System reaction: Warning, changing to substitute values according to priority chain.
Behaviour error lamp: permanent light
Selfhealing: no
Signal Priority: 1
Measurement @ errortime: default value

123 / 523608 / FrmMngTOTSC1DR

Error description CAN ERROR TSC1-DR

CAN message TSC1-DR (Torque/Speed Control #1 from Driveline to Retarder): the message can not be received by ECU

Error codes

DEUTZ-Errorcode: 123
BlinkCode (short-long-short): 1 - 1 - 9
SPN: 523608
possible FMI:
12: Defective component
12: Defective component
12. Errormode not identifiable
12. Errormode not identifiable

Errordetection

Errorlamp shows permanent light. Entry in errormemory.

Possible reason for error

Missing message "TSC1-DR", CAN bus wrong cabled, wiring is demaged, receiver (sender of the message) work inaccurately, parametering inaccurate

Take actions for error repair

Check CAN Bus cabling (Bus sheduling, polarity, short circuit, power interrupt), test protocol of receiver, check CAN functional range

other error properties

System reaction: Warning, changing to substitute values according to priority chain.
Behaviour error lamp: permanent light
Selfhealing: no
Signal Priority: 1
Measurement @ errortime: default value

124 / 523609 / FrmMngTOTSC1PE

Error description CAN ERROR TSC1-PE

CAN message TSC1-PE (Torque/Speed Control #1 from Power Take Off to Engine): the message can not be received by ECU

Error codes

DEUTZ-Errorcode: 124
BlinkCode (short-long-short): 1 - 1 - 8
SPN: 523609
possible FMI:
12: Defective component
12: Defective component
12. Errormode not identifiable
12. Errormode not identifiable

Errordetection

Errorlamp shows permanent light. Entry in errormemory.

Possible reason for error

Missing message "TSC1-PE", CAN bus wrong cabled, wiring is demaged, receiver (sender of the message) work inaccurately, parametering inaccurate

Take actions for error repair

Check CAN Bus cabling (Bus sheduling, polarity, short circuit, power interrupt), test protocol of receiver, check CAN functional range

other error properties

System reaction: Warning, changing to substitute values according to priority chain.
Behaviour error lamp: permanent light
Selfhealing: no
Signal Priority: 1
Measurement @ errortime: default value

125 / 898 / FrmMngTOTSC1TE

Error description CAN ERROR TSC1-TE

CAN message TSC1-TE (Torque/Speed Control #1 from Traction Control to Engine): the message can not be received by ECU

Error codes

DEUTZ-Errorcode: 125
BlinkCode (short-long-short): 1 - 1 - 8
SPN: 898
possible FMI:
12: Defective component
12: Defective component
12. Errormode not identifiable
12. Errormode not identifiable

Errordetection

Errorlamp shows permanent light. Entry in errormemory.

Possible reason for error

Missing message "TSC1-TE", CAN bus wrong cabled, wiring is demaged, receiver (sender of the message) work inaccurately, parametering inaccurate

Take actions for error repair

Check CAN Bus cabling (Bus sheduling, polarity, short circuit, power interrupt), test protocol of receiver, check CAN functional range

other error properties

System reaction: Warning, changing to substitute values according to priority chain.
Behaviour error lamp: permanent light
Selfhealing: no
Signal Priority: 1
Measurement @ errortime: default value

126 / 520 / FrmMngTOTSC1TR

Error description CAN ERROR TSC1-TR

CAN message TSC1-TR (Torque/Speed Control #1 from Traction Control to Retarder): the message can not be received by ECU

Error codes

DEUTZ-Errorcode: 126
BlinkCode (short-long-short): 1 - 1 - 9
SPN: 520
possible FMI:
12: Defective component
12: Defective component
12. Errormode not identifiable
12. Errormode not identifiable

Errordetection

Errorlamp shows permanent light. Entry in errormemory.

Possible reason for error

Missing message "TSC1-TR", CAN bus wrong cabled, wiring is demaged, receiver (sender of the message) work inaccurately, parametering inaccurate

Take actions for error repair

Check CAN Bus cabling (Bus sheduling, polarity, short circuit, power interrupt), test protocol of receiver, check CAN functional range

other error properties

System reaction: Warning, changing to substitute values according to priority chain.
Behaviour error lamp: permanent light
Selfhealing: no
Signal Priority: 1
Measurement @ errortime: default value

127 / 523610 / FrmMngTOTSC1VE

Error description CAN ERROR TSC1-VE

CAN message TSC1-VE (Torque/Speed Control #1 from Vehicle Control to Engine): the message can not be received by ECU

Error codes

DEUTZ-Errorcode: 127
BlinkCode (short-long-short): 1 - 1 - 8
SPN: 523610
possible FMI:
12: Defective component
12: Defective component
12. Errormode not identifiable
12. Errormode not identifiable

Errordetection

Errorlamp shows permanent light. Entry in errormemory.

Possible reason for error

Missing message "TSC1-VE", CAN bus wrong cabled, wiring is demaged, receiver (sender of the message) work inaccurately, parametering inaccurate

Take actions for error repair

Check CAN Bus cabling (Bus sheduling, polarity, short circuit, power interrupt), test protocol of receiver, check CAN functional range

other error properties

System reaction: Warning, changing to substitute values according to priority chain.
Behaviour error lamp: permanent light
Selfhealing: no
Signal Priority: 1
Measurement @ errortime: default value

128 / 523611 / FrmMngTOTSC1VR

Error description CAN ERROR TSC1-VR

CAN message TSC1-VR (Torque/Speed Control #1 from Vehicle Control to Retarder): the message can not be received by ECU

Error codes

DEUTZ-Errorcode: 128
BlinkCode (short-long-short): 1 - 1 - 9
SPN: 523611
possible FMI:
12: Defective component
12: Defective component
12. Errormode not identifiable
12. Errormode not identifiable

Errordetection

Errorlamp shows permanent light. Entry in errormemory.

Possible reason for error

Missing message "TSC1-VR", CAN bus wrong cabled, wiring is demaged, receiver (sender of the message) work inaccurately, parametering inaccurate

Take actions for error repair

Check CAN Bus cabling (Bus sheduling, polarity, short circuit, power interrupt), test protocol of receiver, check CAN functional range

other error properties

System reaction: Warning, changing to substitute values according to priority chain.
Behaviour error lamp: permanent light
Selfhealing: no
Signal Priority: 1
Measurement @ errortime: default value

131 / 523500 / FrmMngTxTO

Error description CAN MESS. TIMEOUT
CAN message: the ECU detects a timeout for one or more posted message

Error codes
DEUTZ-Errorcode: 131
BlinkCode (short-long-short): 2 - 7 - 1
SPN: 523500
possible FMI:
12. Errormode not identifiable
12. Errormode not identifiable
12: Defective component
12. Errormode not identifiable

Errordetection
Errorlamp shows permanent light. Entry in errormemory.

Possible reason for error
Timeout for sent messages

Take actions for error repair

other error properties
System reaction:
Behaviour error lamp: permanent light
Selfhealing: yes
Signal Priority: 1
Measurement @ errortime: -

133 / 174 / FTSCD

Error description FUEL TEMP. SENSOR
Fuel temperature sensor: the voltage measured by ECU is out of the target range

Error codes
DEUTZ-Errorcode: 133
BlinkCode (short-long-short): 2 - 2 - 7
SPN: 174
possible FMI:
3: Voltage to high or short circuit to +Ubatt
4: Voltage to low or short circuit to -Ubatt
12. Errormode not identifiable
12. Errormode not identifiable

Errordetection
Errorlamp shows permanent light. Entry in errormemory.

Possible reason for error
Fuel temp. sensor: cable break or short circuit, sendor defective, connection cable demaged

Take actions for error repair
Check cabling, if sensor not working, check sensor and if necessary replace it, check connection cable and if necessary repair or replace it

other error properties
System reaction: Warning, substitute value
Behaviour error lamp: permanent light
Selfhealing: yes
Signal Priority: 4
Measurement @ errortime: default value

134 / 174 / FTSCDSysReac

Error description FUEL TEMP. SENSOR
Fuel temperature: the fuel temperature calculated by ECU is above the target range; the ECU activates a system reaction

Error codes
DEUTZ-Errorcode: 134
BlinkCode (short-long-short): 2 - 3 - 7
SPN: 174
possible FMI:
0: data valid, but above normal working area
0: data valid, but above normal working area
12. Errormode not identifiable
12. Errormode not identifiable

Errordetection
Errorlamp shows permanent light
oder
blinking. Entry in errormemory.

Possible reason for error
Above target range with system reaction, interruption of fuel loop (for example, rail pressure relief valve defective), sensor defective, connection cable demaged

Take actions for error repair
Check fuel system and if necessary repair it, check sensor and if necessary replace it, check connection cable and if necessary repair or replace it

other error properties
System reaction: Advice: FTSCD_stSysReacReq
Behaviour error lamp: permanent light
oder
blinking
Selfhealing: yes
Signal Priority: 4
Measurement @ errortime: actual value

136 / 523618 / GOTSCD

Error description CUSTOMER TEMPSENS 1

Customer specific temperature sensor 1: the voltage of sensor measured by ECU is out of the target range or the received value of temperature via CAN is defective

Error codes

DEUTZ-Errorcode: 136
BlinkCode (short-long-short): 1 - 3 - 3
SPN: 523618
possible FMI:
3: Voltage to high or short circuit to +Ubatt
4: Voltage to low or short circuit to -Ubatt
2: data stream is defective
12. Errormode not identifiable

Errordetection

Errorlamp shows permanent light. Entry in errormemory.

Possible reason for error

Cable break or short circuit (sensor 1), sensor defective, connection cable demaged, CAN bus wrong cabled, wiring demaged, receiver (sender of the message) work inaccurately, parametering inaccurate

Take actions for error repair

Customer specific bugfixing, check sensor and if necessary replace it, check connection cable and if necessary repair or replace it, Check CAN Bus cabling (Bus sheduling, polarity, short circuit, power interrupt), test protocol of receiver, check CAN fun

other error properties

System reaction: Warning, substitute value (customer specific)
Behaviour error lamp: permanent light
Selfhealing: yes
Signal Priority: 2
Measurement @ errortime: default value

137 / 523619 / GOTSCDSysReac

Error description

Customer specific temperature 1: the temperature calculated by ECU is above the target range; the ECU activates a system reaction

Error codes

DEUTZ-Errorcode: 137
BlinkCode (short-long-short): 1 - 3 - 3
SPN: 523619
possible FMI:
2: data stream is defective
2: data stream is defective
12. Errormode not identifiable
12. Errormode not identifiable

Errordetection

Errorlamp shows permanent light
oder
blinking. Entry in errormemory.

Possible reason for error

Outside target range with system reaction (temperature 1), dependant on the application

Take actions for error repair

Customer specific bugfixing, denpendant on application

other error properties

System reaction: Advice: GOTSCD_stSysReacReq
Behaviour error lamp: permanent light
oder
blinking
Selfhealing: yes
Signal Priority: 3
Measurement @ errortime: actual value

138 / 29 / HdThrt

Error description THROTTLE 2

Hand throttle pedal sensor: the voltage measured by ECU is out of the target range or the calculated pedal position is implausible compared with the position of accelerator pedal 1

Error codes

DEUTZ-Errorcode: 138
BlinkCode (short-long-short): 1 - 2 - 6
SPN: 29
possible FMI:
3: Voltage to high or short circuit to +Ubatt
4: Voltage to low or short circuit to -Ubatt
12. Errormode not identifiable
2: data stream is defective

Errordetection

Errorlamp shows permanent light. Entry in errormemory.

Possible reason for error

Cable break or short circuit, signal implausible compared to signal of idle sensor, transmitter defective, connection cable demaged

Take actions for error repair

Check cabling, check sensor and if necessary replace it, check connection cable and if necessary repair or replace it

other error properties

System reaction: Warning, changing to substitute values according to priority chain or limp home
Behaviour error lamp: permanent light
Selfhealing: no
Signal Priority: 4
Measurement @ errortime: actual value

139 / 1638 / HOTSCD

Error description CUSTOMER TEMPSENS 2
Customer specific temperature sensor 2: the voltage of sensor measured by ECU is out of the target range or the received value of temperature via CAN is defective

Error codes
DEUTZ-Errorcode: 139
BlinkCode (short-long-short): 3 - 1 - 4
SPN: 1638
possible FMI:
3: Voltage to high or short circuit to +Ubatt
4: Voltage to low or short circuit to -Ubatt
12: Defective component
12. Errormode not identifiable

Errordetection
Errorlamp shows permanent light. Entry in errormemory.

Possible reason for error
Cable break or short circuit (sensor 2), sensor defective, connection cable demaged, CAN bus wrong cabled, wiring demaged, receiver (sender of the message) work inaccurately, parametering inaccurate

Take actions for error repair
Customer specific bugfixing, check sensor and if necessary replace it, check connection cable and if necessary repair or replace it, Check CAN Bus cabling (Bus sheduling, polarity, short circuit, power interrupt), test protocol of receiver, check CAN fun

other error properties
System reaction: Warning, substitute value (customer specific)
Behaviour error lamp: permanent light
Selfhealing: yes
Signal Priority: 2
Measurement @ errortime: default value

140 / 1638 / HOTSCDSysReac

Error description CUSTOMER TEMPSENS 2
Customer specific temperature 2: the temperature calculated by ECU is above the target range; the ECU activates a system reaction

Error codes
DEUTZ-Errorcode: 140
BlinkCode (short-long-short): 3 - 1 - 4
SPN: 1638
possible FMI:
2: data stream is defective
2: data stream is defective
12. Errormode not identifiable
12. Errormode not identifiable

Errordetection
Errorlamp shows permanent light
oder
blinking. Entry in errormemory.

Possible reason for error
Outside target range with system reaction (temperature 2), dependant on the application

Take actions for error repair
Customer specific bugfixing, denpendant on application

other error properties
System reaction: Advice: HOTSCD_stSysReacReq
Behaviour error lamp: permanent light
oder
blinking
Selfhealing: yes
Signal Priority: 3
Measurement @ errortime: actual value

141 / 523617 / HWEMonCom

Error description INTERNAL COMM. ERROR
Internal hardware monitoring: the ECU detects a communication distrubance

Error codes
DEUTZ-Errorcode: 141
BlinkCode (short-long-short): 5 - 5 - 5
SPN: 523617
possible FMI:
12: Defective component
12. Errormode not identifiable
12. Errormode not identifiable
12. Errormode not identifiable

Errordetection
Errorlamp shows permanent light. Entry in errormemory.

Possible reason for error
Communication with chip CJ 940 disturbed, ECU defective

Take actions for error repair
If cannot delete the error, change ECU

other error properties
System reaction: Warning
Behaviour error lamp: permanent light
Selfhealing: no
Signal Priority: 4
Measurement @ errortime: -

142 / 630 / HWEMonEEPROM

Error description EEPROM MEM. ACCESS
Internal hardware monitoring: the ECU finds an error during the access to ist EEPROM memory or works with an alternative value

Error codes
DEUTZ-Errorcode: 142
BlinkCode (short-long-short): 2 - 8 - 1
SPN: 630
possible FMI:
12. Errormode not identifiable
12: Defective component
12: Defective component
12: Defective component

Errordetection
Errorlamp shows permanent light. Entry in errormemory.

Possible reason for error
Error during EEPROM memory access or EEPROM works with substitute value, programming error, ECU defective

Take actions for error repair
If not programmed, EEPROM is defect –> ECU is defect, reprogram ECU and if necessary replace it

other error properties
System reaction: Warning
Behaviour error lamp: permanent light
Selfhealing: no
Signal Priority: 4
Measurement @ errortime: -

143 / 523612 / HWEMonRcyLocked

Error description INT. RECOVERY
Internal hardware monitoring: the CPU of the ECU is reset and the cause is logged internally; no item will be created in error memory

Error codes
DEUTZ-Errorcode: 143
BlinkCode (short-long-short): 5 - 5 - 5
SPN: 523612
possible FMI:
12. Errormode not identifiable
12. Errormode not identifiable
12. Errormode not identifiable
14: Special Instructions

Errordetection
Errorlamp shows blinking. Entry in errormemory.

Possible reason for error
A recovery occurred which is stored as protected

Take actions for error repair
Recoverey occured which is stored as protected
With parameter HWEMon_numRexxxxxxx the recovery nummer and the subsequent position can be identified. See especially SW-Doku _rcy_auto.pdf

other error properties
System reaction: Recovery of ECU
Behaviour error lamp: blinking
Selfhealing: no
Signal Priority: 5
Measurement @ errortime: -

144 / 523612 / HWEMonRcySuppressed

Error description INT. RECOVERY
Internal hardware monitoring: the CPU of the ECU is reset and the cause is logged internally; no item will be created in error memory

Error codes
DEUTZ-Errorcode: 144
BlinkCode (short-long-short): 5 - 5 - 5
SPN: 523612
possible FMI:
12. Errormode not identifiable
12. Errormode not identifiable
12. Errormode not identifiable
14: Special Instructions

Errordetection
Errorlamp shows blinking. Entry in errormemory.

Possible reason for error
A recovery occurred which is not stored

Take actions for error repair
Recoverey occured which is stored as protected
With parameter HWEMon_numRexxxxxxx the recovery nummer and the subsequent position can be identified. See especially SW-Doku _rcy_auto.pdf

other error properties
System reaction: Warning, shown at error path
Behaviour error lamp: blinking
Selfhealing: no
Signal Priority: 5
Measurement @ errortime: -

145 / 523612 / HWEMonRcyVisible

Error description INT. RECOVERY
Internal hardware monitoring: the CPU of the ECU is reset and an item will be created in error memory

Error codes
DEUTZ-Errorcode: 145
BlinkCode (short-long-short): 5 - 5 - 5
SPN: 523612
possible FMI:
12. Errormode not identifiable
12. Errormode not identifiable
12. Errormode not identifiable
14: Special Instructions

Errordetection
Errorlamp shows blinking. Entry in errormemory.

Possible reason for error
A recovery occurred which is visible in the error memory

Take actions for error repair
Recoverey occured which is stored as protected
With parameter HWEMon_numRexxxxxxx the recovery nummer and the subsequent position can be identified. See especially SW-Doku _rcy_auto.pdf

other error properties
System reaction: Recovery of ECU
Behaviour error lamp: blinking
Selfhealing: no
Signal Priority: 5
Measurement @ errortime: -

146 / 523612 / HWEMonUMaxSupply

Error description INT. RECOVERY
Internal hardware monitoring: the ECU detects an excess of the target range for the power supply of ist communication module

Error codes
DEUTZ-Errorcode: 146
BlinkCode (short-long-short): 5 - 5 - 5
SPN: 523612
possible FMI:
3: Voltage to high or short circuit to +Ubatt
12. Errormode not identifiable
12. Errormode not identifiable
12. Errormode not identifiable

Errordetection
Errorlamp shows permanent light. Entry in errormemory.

Possible reason for error
Overvoltage at CJ940, power supply voltage too high, ECU defective

Take actions for error repair
Check working voltage and if necessary correct it, Check ECU and if necessary replace it

other error properties
System reaction: Power stage shut off
Behaviour error lamp: permanent light
Selfhealing: no
Signal Priority: 4
Measurement @ errortime: -

147 / 523612 / HWEMonUMinSupply

Error description INT. RECOVERY
Internal hardware monitoring: the ECU detects an undershooting of the target range for the power supply of ist communication module

Error codes
DEUTZ-Errorcode: 147
BlinkCode (short-long-short): 5 - 5 - 5
SPN: 523612
possible FMI:
12. Errormode not identifiable
4: Voltage to low or short circuit to -Ubatt
12. Errormode not identifiable
12. Errormode not identifiable

Errordetection
Errorlamp shows permanent light. Entry in errormemory.

Possible reason for error
Undervoltage at CJ940, power supply voltage too low, ECU defective

Take actions for error repair
Check working voltage and if necessary correct it, Check ECU and if necessary replace it

other error properties
System reaction: Power stage shut off
Behaviour error lamp: permanent light
Selfhealing: no
Signal Priority: 4
Measurement @ errortime: -

149 / 105 / IATSCD

Error description CHARGE AIR TEMP.

Charge air temperature sensor: the voltage of sensor measured by ECU is out of the target range or the received value of temperature via CAN is defective

Error codes

DEUTZ-Errorcode: 149
BlinkCode (short-long-short): 1 - 2 - 8
SPN: 105
possible FMI:
3: Voltage to high or short circuit to +Ubatt
4: Voltage to low or short circuit to -Ubatt
2: data stream is defective
12. Errormode not identifiable

Errordetection

Errorlamp shows permanent light. Entry in errormemory.

Possible reason for error

Cable break or short circuit, sensor defective, connection cable demaged, CAN bus wrong cabled, wiring demaged, receiver (sender of the message) work inaccurately, parametering inaccurate

Take actions for error repair

Check cabling, LDF6T-sensor not working, check sensor and if necessary replace it, check connection cable and if necessary repair or replace it, Check CAN Bus cabling (Bus sheduling, polarity, short circuit, power interrupt), test protocol of receiver, c

other error properties

System reaction: Warning, substitute value
Behaviour error lamp: permanent light
Selfhealing: yes
Signal Priority: 4
Measurement @ errortime: default value

150 / 105 / IATSCDSysReac

Error description CHARGE AIR TEMP.

Charge air temperature: die charge air temperature calculated by ECU is above the target range; the ECU activates a system reaction

Error codes

DEUTZ-Errorcode: 150
BlinkCode (short-long-short): 2 - 3 - 3
SPN: 105
possible FMI:
0: data valid, but above normal working area
0: data valid, but above normal working area
12. Errormode not identifiable
12. Errormode not identifiable

Errordetection

Errorlamp shows permanent light
oder
blinking. Entry in errormemory.

Possible reason for error

Above target range with system reaction, air system demaged, sensor defective, connection cable demaged

Take actions for error repair

Check construction of LDF6T , check suction parts, check air system and if necessary repair it, check sensor and if necessary replace it, check connection cable and if necessary repair or replace it

other error properties

System reaction: Advice: IATSCD_stSysReacReq
Behaviour error lamp: permanent light
oder
blinking
Selfhealing: yes
Signal Priority: 4
Measurement @ errortime: actual value

153 / 523350 / InjVlvBnk1A

Error description INJECTOR BANK A

Injector cylinder bank 1: the current drain measured by ECU is above the target range

Error codes

DEUTZ-Errorcode: 153
BlinkCode (short-long-short): 1 - 5 - 1
SPN: 523350
possible FMI:
3: Voltage to high or short circuit to +Ubatt
4: Voltage to low or short circuit to -Ubatt
13: out of calibrated range
12. Errormode not identifiable

Errordetection

Errorlamp shows permanent light. Entry in errormemory.

Possible reason for error

Short circuit (cylinder bank 1), injector defective, connection cable demaged

Take actions for error repair

Check cabling, check injectors and if necessary replace them, check connection cable and if necessary repair or replace it

other error properties

System reaction: Warning, cylinder shut off
Behaviour error lamp: permanent light
Selfhealing: yes
Signal Priority: 4
Measurement @ errortime: actual value

154 / 523351 / InjVlvBnk1B

Error description INJECTOR BANK A

Injector cylinder bank 1: the current drain measured by ECU is underneath the target range

Error codes

DEUTZ-Errorcode: 154
BlinkCode (short-long-short): 1 - 5 - 1
SPN: 523351
possible FMI:
13: out of calibrated range
13: out of calibrated range
5: current to low or broken wire
13: out of calibrated range

Errordetection

Errorlamp shows permanent light. Entry in errormemory.

Possible reason for error

Cable break (cylinder bank 1), injector defective, connection cable demaged

Take actions for error repair

Check cabling, check injectors and if necessary replace them, check connection cable and if necessary repair or replace it

other error properties

System reaction: Warning, cylinder shut off
Behaviour error lamp: permanent light
Selfhealing: yes
Signal Priority: 4
Measurement @ errortime: actual value

155 / 523352 / InjVlvBnk2A

Error description INJECTOR BANK B

Injector cylinder bank 2: the current drain measured by ECU is above the target range

Error codes

DEUTZ-Errorcode: 155
BlinkCode (short-long-short): 1 - 5 - 2
SPN: 523352
possible FMI:
3: Voltage to high or short circuit to +Ubatt
4: Voltage to low or short circuit to -Ubatt
13: out of calibrated range
12. Errormode not identifiable

Errordetection

Errorlamp shows permanent light. Entry in errormemory.

Possible reason for error

Short circuit (cylinder bank 2), injector defective, connection cable demaged

Take actions for error repair

Check cabling, check injectors and if necessary replace them, check connection cable and if necessary repair or replace it

other error properties

System reaction: Warning, cylinder shut off
Behaviour error lamp: permanent light
Selfhealing: yes
Signal Priority: 4
Measurement @ errortime: actual value

156 / 523353 / InjVlvBnk2B

Error description INJECTOR BANK B

Injector cylinder bank 2: the current drain measured by ECU is underneath the target range

Error codes

DEUTZ-Errorcode: 156
BlinkCode (short-long-short): 1 - 5 - 2
SPN: 523353
possible FMI:
13: out of calibrated range
13: out of calibrated range
5: current to low or broken wire
13: out of calibrated range

Errordetection

Errorlamp shows permanent light. Entry in errormemory.

Possible reason for error

Cable break (cylinder bank 2), injector defective, connection cable demaged

Take actions for error repair

Check cabling, check injectors and if necessary replace them, check connection cable and if necessary repair or replace it

other error properties

System reaction: Warning, cylinder shut off
Behaviour error lamp: permanent light
Selfhealing: yes
Signal Priority: 4
Measurement @ errortime: actual value

157 / 523354 / InjVlvChipA

Error description PWR. INJ. BANK B
Internal hardware monitoring: the ECU detects an error of ist injector high current output

Error codes
DEUTZ-Errorcode: 157
BlinkCode (short-long-short): 1 - 5 - 3
SPN: 523354
possible FMI:
3: Voltage to high or short circuit to +Ubatt
2: data stream is defective
14: Special Instructions
12: Defective component

Errordetection
Errorlamp shows blinking. Entry in errormemory.

Possible reason for error
High power stage Injector A, ECU defective

Take actions for error repair
If error is not removable, change ECU

other error properties
System reaction: Warninig, outputs shut off
Behaviour error lamp: blinking
Selfhealing: no
Signal Priority: 5
Measurement @ errortime: actual value

158 / 523355 / InjVlvChipB

Error description PWR. INJ. BANK B
Internal hardware monitoring: the ECU detects a disturbance in its injector high current output

Error codes
DEUTZ-Errorcode: 158
BlinkCode (short-long-short): 1 - 5 - 3
SPN: 523355
possible FMI:
12: Defective component
12: Defective component
12: Defective component
12: Defective component

Errordetection
Errorlamp shows blinking. Entry in errormemory.

Possible reason for error
High power stage Injector B, ECU defective

Take actions for error repair
If error is not removable, change ECU

other error properties
System reaction: Warninig, outputs shut off
Behaviour error lamp: blinking
Selfhealing: no
Signal Priority: 5
Measurement @ errortime: actual value

159 / 651 / InjVlvCyl1A

Error description INJECTOR 1
Injector 1: the current drain measured by ECU is above the target range

Error codes
DEUTZ-Errorcode: 159
BlinkCode (short-long-short): 1 - 5 - 4
SPN: 651
possible FMI:
3: Voltage to high or short circuit to +Ubatt
13: out of calibrated range
4: Voltage to low or short circuit to -Ubatt
12. Errormode not identifiable

Errordetection
Errorlamp shows permanent light. Entry in errormemory.

Possible reason for error
Short circuit (cylinder 1), injector defective, connection cable demaged

Take actions for error repair
Check cabling, check injectors and if necessary replace them, check connection cable and if necessary repair or replace it

other error properties
System reaction: Warning, fuel injection failed, shut off wenn the number of active cylinders below minimum
Behaviour error lamp: permanent light
Selfhealing: yes
Signal Priority: 4
Measurement @ errortime: actual value

160 / 651 / InjVlvCyl1B

Error description INJECTOR 1

Injector 1: the current drain measured by ECU is underneath the target range

Error codes

DEUTZ-Errorcode: 160
BlinkCode (short-long-short): 1 - 5 - 4
SPN: 651
possible FMI:
13: out of calibrated range
13: out of calibrated range
5: current to low or broken wire
13: out of calibrated range

Errordetection

Errorlamp shows permanent light. Entry in errormemory.

Possible reason for error

Cable break (cylinder 1), injector defective, connection cable demaged

Take actions for error repair

Check cabling, check injectors and if necessary replace them, check connection cable and if necessary repair or replace it

other error properties

System reaction: Warning, fuel injection failed, shut off wenn the number of active cylinders below minimum
Behaviour error lamp: permanent light
Selfhealing: yes
Signal Priority: 3
Measurement @ errortime: actual value

161 / 652 / InjVlvCyl2A

Error description INJECTOR 2

Injector 2: the current drain measured by ECU is above the target range

Error codes

DEUTZ-Errorcode: 161
BlinkCode (short-long-short): 1 - 5 - 5
SPN: 652
possible FMI:
3: Voltage to high or short circuit to +Ubatt
13: out of calibrated range
4: Voltage to low or short circuit to -Ubatt
12. Errormode not identifiable

Errordetection

Errorlamp shows permanent light. Entry in errormemory.

Possible reason for error

Short circuit (cylinder 2), injector defective, connection cable demaged

Take actions for error repair

Check cabling, check injectors and if necessary replace them, check connection cable and if necessary repair or replace it

other error properties

System reaction: Warning, fuel injection failed, shut off wenn the number of active cylinders below minimum
Behaviour error lamp: permanent light
Selfhealing: yes
Signal Priority: 4
Measurement @ errortime: actual value

162 / 652 / InjVlvCyl2B

Error description INJECTOR 2

Injector 2: the current drain measured by ECU is underneath the target range

Error codes

DEUTZ-Errorcode: 162
BlinkCode (short-long-short): 1 - 5 - 5
SPN: 652
possible FMI:
13: out of calibrated range
13: out of calibrated range
5: current to low or broken wire
13: out of calibrated range

Errordetection

Errorlamp shows permanent light. Entry in errormemory.

Possible reason for error

Cable break (cylinder 2), injector defective, connection cable demaged

Take actions for error repair

Check cabling, check injectors and if necessary replace them, check connection cable and if necessary repair or replace it

other error properties

System reaction: Warning, fuel injection failed, shut off wenn the number of active cylinders below minimum
Behaviour error lamp: permanent light
Selfhealing: yes
Signal Priority: 3
Measurement @ errortime: actual value

163 / 653 / InjVlvCyl3A

Error description INJECTOR 3

Injector 3: the current drain measured by ECU is above the target range

Error codes

DEUTZ-Errorcode: 163
BlinkCode (short-long-short): 1 - 5 - 6
SPN: 653
possible FMI:
3: Voltage to high or short circuit to +Ubatt
13: out of calibrated range
4: Voltage to low or short circuit to -Ubatt
12. Errormode not identifiable

Errordetection

Errorlamp shows permanent light. Entry in errormemory.

Possible reason for error

Short circuit (cylinder 3), injector defective, connection cable demaged

Take actions for error repair

Check cabling, check injectors and if necessary replace them, check connection cable and if necessary repair or replace it

other error properties

System reaction: Warning, fuel injection failed, shut off wenn the number of active cylinders below minimum
Behaviour error lamp: permanent light
Selfhealing: yes
Signal Priority: 4
Measurement @ errortime: actual value

164 / 653 / InjVlvCyl3B

Error description INJECTOR 3

Injector 3: the current drain measured by ECU is underneath the target range

Error codes

DEUTZ-Errorcode: 164
BlinkCode (short-long-short): 1 - 5 - 6
SPN: 653
possible FMI:
13: out of calibrated range
13: out of calibrated range
5: current to low or broken wire
13: out of calibrated range

Errordetection

Errorlamp shows permanent light. Entry in errormemory.

Possible reason for error

Cable break (cylinder 3), injector defective, connection cable demaged

Take actions for error repair

Check cabling, check injectors and if necessary replace them, check connection cable and if necessary repair or replace it

other error properties

System reaction: Warning, fuel injection failed, shut off wenn the number of active cylinders below minimum
Behaviour error lamp: permanent light
Selfhealing: yes
Signal Priority: 3
Measurement @ errortime: actual value

165 / 654 / InjVlvCyl4A

Error description INJECTOR 4

Injector 4: the current drain measured by ECU is above the target range

Error codes

DEUTZ-Errorcode: 165
BlinkCode (short-long-short): 1 - 6 - 1
SPN: 654
possible FMI:
3: Voltage to high or short circuit to +Ubatt
13: out of calibrated range
4: Voltage to low or short circuit to -Ubatt
12. Errormode not identifiable

Errordetection

Errorlamp shows permanent light. Entry in errormemory.

Possible reason for error

Short circuit (cylinder 4), injector defective, connection cable demaged

Take actions for error repair

Check cabling, check injectors and if necessary replace them, check connection cable and if necessary repair or replace it

other error properties

System reaction: Warning, fuel injection failed, shut off wenn the number of active cylinders below minimum
Behaviour error lamp: permanent light
Selfhealing: yes
Signal Priority: 4
Measurement @ errortime: actual value

166 / 654 / InjVlvCyl4B

Error description INJECTOR 4

Injector 4: the current drain measured by ECU is underneath the target range

Error codes

DEUTZ-Errorcode: 166
BlinkCode (short-long-short): 1 - 6 - 1
SPN: 654
possible FMI:
13: out of calibrated range
13: out of calibrated range
5: current to low or broken wire
13: out of calibrated range

Errordetection

Errorlamp shows permanent light. Entry in errormemory.

Possible reason for error

Cable break (cylinder 4), injector defective, connection cable demaged

Take actions for error repair

Check cabling, check injectors and if necessary replace them, check connection cable and if necessary repair or replace it

other error properties

System reaction: Warning, fuel injection failed, shut off wenn the number of active cylinders below minimum
Behaviour error lamp: permanent light
Selfhealing: yes
Signal Priority: 3
Measurement @ errortime: actual value

167 / 655 / InjVlvCyl5A

Error description INJECTOR 5

Injector 5: the current drain measured by ECU is above the target range

Error codes

DEUTZ-Errorcode: 167
BlinkCode (short-long-short): 1 - 6 - 2
SPN: 655
possible FMI:
3: Voltage to high or short circuit to +Ubatt
13: out of calibrated range
4: Voltage to low or short circuit to -Ubatt
12. Errormode not identifiable

Errordetection

Errorlamp shows permanent light. Entry in errormemory.

Possible reason for error

Short circuit (cylinder 5), injector defective, connection cable demaged

Take actions for error repair

Check cabling, check injectors and if necessary replace them, check connection cable and if necessary repair or replace it

other error properties

System reaction: Warning, fuel injection failed, shut off wenn the number of active cylinders below minimum
Behaviour error lamp: permanent light
Selfhealing: yes
Signal Priority: 4
Measurement @ errortime: actual value

168 / 655 / InjVlvCyl5B

Error description INJECTOR 5

Injector 5: the current drain measured by ECU is underneath the target range

Error codes

DEUTZ-Errorcode: 168
BlinkCode (short-long-short): 1 - 6 - 2
SPN: 655
possible FMI:
13: out of calibrated range
13: out of calibrated range
5: current to low or broken wire
13: out of calibrated range

Errordetection

Errorlamp shows permanent light. Entry in errormemory.

Possible reason for error

Cable break (cylinder 5), injector defective, connection cable demaged

Take actions for error repair

Check cabling, check injectors and if necessary replace them, check connection cable and if necessary repair or replace it

other error properties

System reaction: Warning, fuel injection failed, shut off wenn the number of active cylinders below minimum
Behaviour error lamp: permanent light
Selfhealing: yes
Signal Priority: 3
Measurement @ errortime: actual value

169 / 656 / InjVlvCyl6A

Error description INJECTOR 6

Injector 6: the current drain measured by ECU is above the target range

Error codes

DEUTZ-Errorcode: 169
BlinkCode (short-long-short): 1 - 6 - 3
SPN: 656
possible FMI:
3: Voltage to high or short circuit to +Ubatt
13: out of calibrated range
4: Voltage to low or short circuit to -Ubatt
12. Errormode not identifiable

Errordetection

Errorlamp shows permanent light. Entry in errormemory.

Possible reason for error

Short circuit (cylinder 6), injector defective, connection cable demaged

Take actions for error repair

Check cabling, check injectors and if necessary replace them, check connection cable and if necessary repair or replace it

other error properties

System reaction: Warning, fuel injection failed, shut off wenn the number of active cylinders below minimum
Behaviour error lamp: permanent light
Selfhealing: yes
Signal Priority: 4
Measurement @ errortime: actual value

170 / 656 / InjVlvCyl6B

Error description INJECTOR 6

Injector 6: the current drain measured by ECU is underneath the target range

Error codes

DEUTZ-Errorcode: 170
BlinkCode (short-long-short): 1 - 6 - 3
SPN: 656
possible FMI:
13: out of calibrated range
13: out of calibrated range
5: current to low or broken wire
13: out of calibrated range

Errordetection

Errorlamp shows permanent light. Entry in errormemory.

Possible reason for error

Cable break (cylinder 6), injector defective, connection cable demaged

Take actions for error repair

Check cabling, check injectors and if necessary replace them, check connection cable and if necessary repair or replace it

other error properties

System reaction: Warning, fuel injection failed, shut off wenn the number of active cylinders below minimum
Behaviour error lamp: permanent light
Selfhealing: yes
Signal Priority: 3
Measurement @ errortime: actual value

171 / 657 / InjVlvCyl7A

Error description INJECTOR 7

Injector 7: the current drain measured by ECU is above the target range

Error codes

DEUTZ-Errorcode: 171
BlinkCode (short-long-short): 1 - 6 - 4
SPN: 657
possible FMI:
3: Voltage to high or short circuit to +Ubatt
13: out of calibrated range
4: Voltage to low or short circuit to -Ubatt
12. Errormode not identifiable

Errordetection

Errorlamp shows permanent light. Entry in errormemory.

Possible reason for error

Short circuit (cylinder 7), injector defective, connection cable demaged

Take actions for error repair

Check cabling, check injectors and if necessary replace them, check connection cable and if necessary repair or replace it

other error properties

System reaction: Warning, fuel injection failed, shut off wenn the number of active cylinders below minimum
Behaviour error lamp: permanent light
Selfhealing: yes
Signal Priority: 4
Measurement @ errortime: actual value

172 / 657 / InjVlvCyl7B

Error description INJECTOR 7

Injector 7: the current drain measured by ECU is underneath the target range

Error codes

DEUTZ-Errorcode: 172
BlinkCode (short-long-short): 1 - 6 - 4
SPN: 657
possible FMI:
13: out of calibrated range
13: out of calibrated range
5: current to low or broken wire
13: out of calibrated range

Errordetection

Errorlamp shows permanent light. Entry in errormemory.

Possible reason for error

Cable break (cylinder 7), injector defective, connection cable demaged

Take actions for error repair

Check cabling, check injectors and if necessary replace them, check connection cable and if necessary repair or replace it

other error properties

System reaction: Warning, fuel injection failed, shut off wenn the number of active cylinders below minimum
Behaviour error lamp: permanent light
Selfhealing: yes
Signal Priority: 3
Measurement @ errortime: actual value

173 / 658 / InjVlvCyl8A

Error description INJECTOR 8

Injector 8: the current drain measured by ECU is above the target range

Error codes

DEUTZ-Errorcode: 173
BlinkCode (short-long-short): 1 - 6 - 5
SPN: 658
possible FMI:
3: Voltage to high or short circuit to +Ubatt
13: out of calibrated range
4: Voltage to low or short circuit to -Ubatt
12. Errormode not identifiable

Errordetection

Errorlamp shows permanent light. Entry in errormemory.

Possible reason for error

Short circuit (cylinder 8), injector defective, connection cable demaged

Take actions for error repair

Check cabling, check injectors and if necessary replace them, check connection cable and if necessary repair or replace it

other error properties

System reaction: Warning, fuel injection failed, shut off wenn the number of active cylinders below minimum
Behaviour error lamp: permanent light
Selfhealing: yes
Signal Priority: 4
Measurement @ errortime: actual value

174 / 658 / InjVlvCyl8B

Error description INJECTOR 8

Injector 8: the current drain measured by ECU is underneath the target range

Error codes

DEUTZ-Errorcode: 174
BlinkCode (short-long-short): 1 - 6 - 5
SPN: 658
possible FMI:
13: out of calibrated range
13: out of calibrated range
5: current to low or broken wire
13: out of calibrated range

Errordetection

Errorlamp shows permanent light. Entry in errormemory.

Possible reason for error

Cable break (cylinder 8), injector defective, connection cable demaged

Take actions for error repair

Check cabling, check injectors and if necessary replace them, check connection cable and if necessary repair or replace it

other error properties

System reaction: Warning, fuel injection failed, shut off wenn the number of active cylinders below minimum
Behaviour error lamp: permanent light
Selfhealing: yes
Signal Priority: 3
Measurement @ errortime: actual value

175 / 523370 / InjVlvErrDet

Error description RAIL PRESS. MON. DISABLED
Rail pressure monitoring: the monitoring of the rail pressure will be deactivated by ECU because of the activation of the function "compression test" by user

Error codes
DEUTZ-Errorcode: 175
BlinkCode (short-long-short): 5 - 5 - 5
SPN: 523370
possible FMI:
14: Special Instructions
12. Errormode not identifiable
12. Errormode not identifiable
12. Errormode not identifiable

Errordetection
Errorlamp shows . Entry in errormemory.

Possible reason for error
Compression test active: rail-pressure monitoring is going to be disabled

Take actions for error repair
not correct

other error properties
System reaction: Rail pressure monitoring disabled
Behaviour error lamp:
Selfhealing: -
Signal Priority: 1
Measurement @ errortime:

176 / 523615 / MeUnCD_ADC

Error description METERING UNIT
Fuel volume flow rate: the fuel volume rate calculated by ECU at outlet of the fuel metering unit is out of the target range

Error codes
DEUTZ-Errorcode: 176
BlinkCode (short-long-short): 1 - 3 - 5
SPN: 523615
possible FMI:
3: Voltage to high or short circuit to +Ubatt
4: Voltage to low or short circuit to -Ubatt
12. Errormode not identifiable
12. Errormode not identifiable

Errordetection
Errorlamp shows permanent light. Entry in errormemory.

Possible reason for error
Flow rate outside target range

Take actions for error repair

other error properties
System reaction:
Behaviour error lamp: permanent light
Selfhealing: no
Signal Priority: 4
Measurement @ errortime: actual value

177 / 523615 / MeUnCDNoLoad

Error description METERING UNIT
Valve at outlet of the fuel metering unit: the ECU detects no load or temperature excess of the ECU component for power supply of the valve

Error codes
DEUTZ-Errorcode: 177
BlinkCode (short-long-short): 1 - 3 - 5
SPN: 523615
possible FMI:
12. Errormode not identifiable
12. Errormode not identifiable
5: current to low or broken wire
12: Defective component

Errordetection
Errorlamp shows permanent light, 15s before shut off. Entry in errormemory.

Possible reason for error
wiring error or ECU output is switched off because of overtemperature, fuel metering unit defective, connection cable demaged

Take actions for error repair
Check cabling , if necessary check FCU, check fuel metering unit and if necessary replace it, check connection cable and if necessary repair or replace it

other error properties
System reaction: Warning, max.extraction of FCU --> open rail pressure relief valve --> shut the engine off in about 5 minutes
Behaviour error lamp: permanent light, 15s before shut off
Selfhealing: no
Signal Priority: 4
Measurement @ errortime: actual value

178 / 523615 / MeUnCDSCBat

Error description METERING UNIT
Valve at outlet of the fuel metering unit: the current drain measured by ECU is above the target range

Error codes
DEUTZ-Errorcode: 178
BlinkCode (short-long-short): 1 - 3 - 5
SPN: 523615
possible FMI:
12: Defective component
12. Errormode not identifiable
12. Errormode not identifiable
12. Errormode not identifiable

Errordetection
Errorlamp shows permanent light, 15s before shut off. Entry in errormemory.

Possible reason for error
Short circuit to Ubatt, fuel metering unit defective, connection cable demaged

Take actions for error repair
Check cabling , if necessary check FCU, check fuel metering unit and if necessary replace it, check connection cable and if necessary repair or replace it

other error properties
System reaction: Warning, rail pressure relief valve will open
Behaviour error lamp: permanent light, 15s before shut off
Selfhealing: no
Signal Priority: 4
Measurement @ errortime: actual value

179 / 523615 / MeUnCDSCGnd

Error description METERING UNIT
Valve at outlet of the fuel metering unit: the current drain measured by ECU is above the target range

Error codes
DEUTZ-Errorcode: 179
BlinkCode (short-long-short): 1 - 3 - 5
SPN: 523615
possible FMI:
12. Errormode not identifiable
12: Defective component
12. Errormode not identifiable
12. Errormode not identifiable

Errordetection
Errorlamp shows permanent light, 15s before shut off. Entry in errormemory.

Possible reason for error
Short circuit to ground, fuel metering unit defective, connection cable demaged

Take actions for error repair
Check cabling , if necessary check FCU, check fuel metering unit and if necessary replace it, check connection cable and if necessary repair or replace it

other error properties
System reaction: Warning, rail pressure relief valve will open
Behaviour error lamp: permanent light, 15s before shut off
Selfhealing: no
Signal Priority: 4
Measurement @ errortime: actual value

182 / 2634 / MnRly1_SCB

Error description MAIN RELAY
Main relay 1: the current drains measured by ECU is above the target range

Error codes
DEUTZ-Errorcode: 182
BlinkCode (short-long-short): 1 - 3 - 7
SPN: 2634
possible FMI:
3: Voltage to high or short circuit to +Ubatt
12. Errormode not identifiable
12. Errormode not identifiable
12. Errormode not identifiable

Errordetection
Errorlamp shows permanent light. Entry in errormemory.

Possible reason for error
Short circuit to Ubatt (relay 1), relay defective, connection cable demaged

Take actions for error repair
Check cabling, check ECU, check relay and if necessary replace it, check connection cable and if necessary repair or replace it

other error properties
System reaction: Warning, shutoff the outputs MPROP
Behaviour error lamp: permanent light
Selfhealing: no
Signal Priority: 3
Measurement @ errortime: actual value

183 / 2634 / MnRly1_SCG

Error description MAIN RELAY
Main relay 1: the current drains measured by ECU is above the target range

Error codes
DEUTZ-Errorcode: 183
BlinkCode (short-long-short): 1 - 3 - 8
SPN: 2634
possible FMI:
12. Errormode not identifiable
4: Voltage to low or short circuit to -Ubatt
12. Errormode not identifiable
12. Errormode not identifiable

Errordetection
Errorlamp shows permanent light. Entry in errormemory.

Possible reason for error
Short circuit to ground (relay 1), relay defective, connection cable demaged

Take actions for error repair
Check cabling, check ECU, check relay and if necessary replace it, check connection cable and if necessary repair or replace it

other error properties
System reaction: Warning, shutoff the outputs MPROP
Behaviour error lamp: permanent light
Selfhealing: no
Signal Priority: 3
Measurement @ errortime: actual value

184 / 523420 / Montr

Error description WATCHDOG COUNTER
Internal hardware monitoring: the ECU detects an disturbance in ist monitoring module (Wachtdog)

Error codes
DEUTZ-Errorcode: 184
BlinkCode (short-long-short): 1 - 3 - 9
SPN: 523420
possible FMI:
12. Errormode not identifiable
12. Errormode not identifiable
12. Errormode not identifiable
14: Special Instructions

Errordetection
Errorlamp shows blinking. Entry in errormemory.

Possible reason for error
Watchdog counter exceeds maximum, ECU defective

Take actions for error repair
If error is not removable, change ECU

other error properties
System reaction: Recovery of ECU
Behaviour error lamp: blinking
Selfhealing: no
Signal Priority: 5
Measurement @ errortime: -

186 / 2634 / MRlyCD

Error description MAIN RELAY
Main relay: during the switching off, main relay does not switch on within an allowed time

Error codes
DEUTZ-Errorcode: 186
BlinkCode (short-long-short): 2 - 6 - 1
SPN: 2634
possible FMI:
7: Mechanical system not OK
12: Defective component
12. Errormode not identifiable
12. Errormode not identifiable

Errordetection
Errorlamp shows permanent light. Entry in errormemory.

Possible reason for error
EDC16: main relay not open in allowed time or main relay open too early; EDC7: main relay not open in allowed time or short circuit of main relay to ground; EDC16: main relay defective, connection cable demaged; generally: rapid shut-off of the ECU (witho

Take actions for error repair
EDC16: check external main relay, check cabling
EDC7: if error is not removable, change ECU, EDC16: Check main relay and if necessary replace it, check connection cable and if necessary repair or replace it; both: if error is not removable, change ECU

other error properties
System reaction: Warning
Behaviour error lamp: permanent light
Selfhealing: no
Signal Priority: 3
Measurement @ errortime: actual value

187 / 563 / MRlyCDMnRly2

Error description MAIN RELAY 2

Main relay 2 (in ECU): during the switching off, main relay does not switch on within an allowed time

Error codes

DEUTZ-Errorcode: 187
BlinkCode (short-long-short): 2 - 6 - 1
SPN: 563
possible FMI:
7: Mechanical system not OK
12: Defective component
12. Errormode not identifiable
12. Errormode not identifiable

Errordetection

Errorlamp shows permanent light. Entry in errormemory.

Possible reason for error

rapid shut-off of the ECU (without waiting till the end of the afterrun), ECU defective

Take actions for error repair

If error not removable, change ECU

other error properties

System reaction:
Behaviour error lamp: permanent light
Selfhealing: no
Signal Priority: 3
Measurement @ errortime: actual value

188 / 2634 / MRlyCDMnRly3

Error description MAIN RELAY

Main relay 3 (in ECU): during the switching off, main relay does not switch on within an allowed time

Error codes

DEUTZ-Errorcode: 188
BlinkCode (short-long-short): 2 - 6 - 1
SPN: 2634
possible FMI:
7: Mechanical system not OK
12: Defective component
12. Errormode not identifiable
12. Errormode not identifiable

Errordetection

Errorlamp shows permanent light. Entry in errormemory.

Possible reason for error

Short circuit to ground or emergency shut-off (relay 3 internal), rapid shut-off of the ECU (without waiting till the end of the afterrun), ECU defective

Take actions for error repair

Check cabling, check ECU, if error not removable, change ECU

other error properties

System reaction: Warning, shutoff the outputs MPROP (see BOSCH-Electricity operating plan)
Behaviour error lamp: permanent light
Selfhealing: no
Signal Priority: 3
Measurement @ errortime: actual value

189 / 523450 / MSSCD1

Error description MULTISTATE SWITCH 1

Multi state switch 1: the voltage measured by ECU is out of the target range or the swith setting is not plausible

Error codes

DEUTZ-Errorcode: 189
BlinkCode (short-long-short): 1 - 4 - 3
SPN: 523450
possible FMI:
3: Voltage to high or short circuit to +Ubatt
4: Voltage to low or short circuit to -Ubatt
12. Errormode not identifiable
2: data stream is defective

Errordetection

Errorlamp shows permanent light. Entry in errormemory.

Possible reason for error

Cable break or short circuit, input voltage outside target range (switch 1), switch defective, connection cable demaged

Take actions for error repair

Check cabling and sensor, check switch and if necessary replace it, check connection cable and if necessary repair or replace it

other error properties

System reaction: Warning, substitute value
Behaviour error lamp: permanent light
Selfhealing: yes
Signal Priority: 2
Measurement @ errortime: default value

190 / 523451 / MSSCD2

Error description MULTISTATE SWITCH 2

Multi state switch 2: the voltage measured by ECU is out of the target range or the swith setting is not plausible

Error codes

DEUTZ-Errorcode: 190
BlinkCode (short-long-short): 1 - 4 - 3
SPN: 523451
possible FMI:
3: Voltage to high or short circuit to +Ubatt
4: Voltage to low or short circuit to -Ubatt
12. Errormode not identifiable
2: data stream is defective

Errordetection

Errorlamp shows permanent light. Entry in errormemory.

Possible reason for error

Cable break or short circuit, input voltage outside target range (switch 2), switch defective, connection cable demaged

Take actions for error repair

Check cabling and sensor, check switch and if necessary replace it, check connection cable and if necessary repair or replace it

other error properties

System reaction: Warning, substitute value
Behaviour error lamp: permanent light
Selfhealing: yes
Signal Priority: 2
Measurement @ errortime: default value

191 / 523452 / MSSCD3

Error description MULTISTATE SWITCH 3

Multi state switch 3: the voltage measured by ECU is out of the target range or the swith setting is not plausible

Error codes

DEUTZ-Errorcode: 191
BlinkCode (short-long-short): 1 - 4 - 3
SPN: 523452
possible FMI:
3: Voltage to high or short circuit to +Ubatt
4: Voltage to low or short circuit to -Ubatt
12. Errormode not identifiable
2: data stream is defective

Errordetection

Errorlamp shows permanent light. Entry in errormemory.

Possible reason for error

Cable break or short circuit, input voltage outside target range (switch 3), switch defective, connection cable demaged

Take actions for error repair

Check cabling and sensor, check switch and if necessary replace it, check connection cable and if necessary repair or replace it

other error properties

System reaction: Warning, substitute value
Behaviour error lamp: permanent light
Selfhealing: yes
Signal Priority: 2
Measurement @ errortime: default value

192 / 639 / NetMngCANAOff

Error description CAN A BUS OFF

CAN bus A: the ECU is not allowed to send messages, because the status "BusOff" is detected

Error codes

DEUTZ-Errorcode: 192
BlinkCode (short-long-short): 2 - 7 - 1
SPN: 639
possible FMI:
14: Special Instructions
12. Errormode not identifiable
12. Errormode not identifiable
12. Errormode not identifiable

Errordetection

Errorlamp shows permanent light. Entry in errormemory.

Possible reason for error

Cable break or short circuit, off-state (CAN bus A), CAN bus deactivated, connection cable demaged

Take actions for error repair

Check cabling of CAN bus and if necessary repair it, check connection cable and if necessary repair or replace it

other error properties

System reaction:
Behaviour error lamp: permanent light
Selfhealing: yes
Signal Priority: 2
Measurement @ errortime:

193 / 1231 / NetMngCANBOff

Error description CAN B BUS OFF

CAN bus B: the ECU is not allowed to send messages, because the status "BusOff" is detected

Error codes

DEUTZ-Errorcode: 193
BlinkCode (short-long-short): 2 - 7 - 1
SPN: 1231
possible FMI:
14: Special Instructions
12. Errormode not identifiable
12. Errormode not identifiable
12. Errormode not identifiable

Errordetection

Errorlamp shows permanent light. Entry in errormemory.

Possible reason for error

Cable break or short circuit, off-state (CAN bus B), CAN bus deactivated, connection cable demaged

Take actions for error repair

Check cabling of CAN bus and if necessary repair it, check connection cable and if necessary repair or replace it

other error properties

System reaction:
Behaviour error lamp: permanent light
Selfhealing: yes
Signal Priority: 2
Measurement @ errortime:

194 / 1235 / NetMngCANCOff

Error description CAN C BUS OFF

CAN bus C: the ECU is not allowed to send messages, because the status "BusOff" is detected

Error codes

DEUTZ-Errorcode: 194
BlinkCode (short-long-short): 2 - 7 - 1
SPN: 1235
possible FMI:
14: Special Instructions
12. Errormode not identifiable
12. Errormode not identifiable
12. Errormode not identifiable

Errordetection

Errorlamp shows permanent light. Entry in errormemory.

Possible reason for error

Cable break or short circuit, off-state (CAN bus C), CAN bus deactivated, connection cable demaged

Take actions for error repair

Check cabling of CAN bus and if necessary repair it, check connection cable and if necessary repair or replace it

other error properties

System reaction:
Behaviour error lamp: permanent light
Selfhealing: yes
Signal Priority: 2
Measurement @ errortime:

195 / 705 / OPLpCD

Error description OIL PRESS LAMP

Warning lamp for oil level: the current drain measured by ECU is out of the target range or the maximum temperature of the ECU component for power supply of the lamp is exceeded

Error codes

DEUTZ-Errorcode: 195
BlinkCode (short-long-short): 1 - 3 - 5
SPN: 705
possible FMI:
3: Voltage to high or short circuit to +Ubatt
4: Voltage to low or short circuit to -Ubatt
5: current to low or broken wire
2: data stream is defective

Errordetection

Errorlamp shows permanent light. Entry in errormemory.

Possible reason for error

Cable break or short circuit, lamp defective, connection cable demaged

Take actions for error repair

Check cabling and load, check lamp and if necessary replace it, check connection cable and if necessary repair or replace it

other error properties

System reaction: Warning, shutoff output
Behaviour error lamp: permanent light
Selfhealing: no
Signal Priority: 1
Measurement @ errortime: default value

196 / 100 / OPSCD

Error description ENG OIL PRESS.
Oil pressure sensor: the voltage of sensor measured by ECU is out of the target range or the received value of oil pressure via CAN is implausible (Oil pressure is above the target range with higher oil temperature at the same time)

Error codes
DEUTZ-Errorcode: 196
BlinkCode (short-long-short): 2 - 2 - 4
SPN: 100
possible FMI:
3: Voltage to high or short circuit to +Ubatt
4: Voltage to low or short circuit to -Ubatt
2: data stream is defective
0: data valid, but above normal working area

Errordetection
Errorlamp shows permanent light. Entry in errormemory.

Possible reason for error
Cable break or short circuit, sensor defective, connection cable demaged, CAN bus wrong cabled, wiring demaged, receiver (sender of the message) work inaccurately, parametering inaccurate

Take actions for error repair
Check cabling, if sensor not working, check sensor and if necessary replace it, check connection cable and if necessary repair or replace it, Check CAN Bus cabling (Bus sheduling, polarity, short circuit, power interrupt), test protocol of receiver, chec

other error properties
System reaction: Warning, substitute value
Behaviour error lamp: permanent light
Selfhealing: yes
Signal Priority: 4
Measurement @ errortime: default value

197 / 100 / OPSCD1

Error description ENG OIL PRESS.
Oil pressure: the oil pressure calculated by ECU is implausibly low

Error codes
DEUTZ-Errorcode: 197
BlinkCode (short-long-short): 2 - 3 - 1
SPN: 100
possible FMI:
12. Errormode not identifiable
12. Errormode not identifiable
12. Errormode not identifiable
1: data valid, but below normal working area

Errordetection
Errorlamp shows permanent light. Entry in errormemory.

Possible reason for error
Oil pressure implausible low, sensor defective, connection cable demaged

Take actions for error repair
Check cabling, if sensor not working, check sensor and if necessary replace it, check connection cable and if necessary repair or replace it

other error properties
System reaction: Warning, substitute value
Behaviour error lamp: permanent light
Selfhealing: yes
Signal Priority: 2
Measurement @ errortime: actual value

198 / 100 / OPSCDSysReacHi

Error description ENG OIL PRESS.
Oil pressure: the oil pressure calculated by ECU is above the target range; the ECU activates a system reaction

Error codes
DEUTZ-Errorcode: 198
BlinkCode (short-long-short): 2 - 3 - 1
SPN: 100
possible FMI:
0: data valid, but above normal working area
0: data valid, but above normal working area
12. Errormode not identifiable
12. Errormode not identifiable

Errordetection
Errorlamp shows permanent light
oder
blinking. Entry in errormemory.

Possible reason for error
Above target range, oil volume too large, sensor defective, oil pump defective, connection cable demaged

Take actions for error repair
Check oil level and if necessary correct it, check oil pump and if necessary replace it, check sensor and if necessary replace it, check connection cable and if necessary repair or replace it

other error properties
System reaction: Advice: OPSCD_stSysReacReqHi
Behaviour error lamp: permanent light
oder
blinking
Selfhealing: yes
Signal Priority: 4
Measurement @ errortime: actual value

199 / 100 / OPSCDSysReacLo

Error description ENG OIL PRESS.
Oil pressure: the oil pressure calculated by ECU is underneath the target range; the ECU activates a system reaction

Error codes
DEUTZ-Errorcode: 199
BlinkCode (short-long-short): 2 - 3 - 1
SPN: 100
possible FMI:
1: data valid, but below normal working area
1: data valid, but below normal working area
12. Errormode not identifiable
12. Errormode not identifiable

Errordetection
Errorlamp shows permanent light
oder
blinking. Entry in errormemory.

Possible reason for error
Below target range, oil volume too small, sensor defective, oil pump defective, connection cable demaged

Take actions for error repair
Check oil level and if necessary correct it, check oil pump and if necessary replace it, check sensor and if necessary replace it, check connection cable and if necessary repair or replace it

other error properties
System reaction: Advice: OPSCD_stSysReacReqLo
Behaviour error lamp: permanent light
oder
blinking
Selfhealing: yes
Signal Priority: 4
Measurement @ errortime: actual value

200 / 1237 / OSwCD

Error description OVERRIDE SWITCH
Bridgeover switch: the ECU receives a permanent signal

Error codes
DEUTZ-Errorcode: 200
BlinkCode (short-long-short): 1 - 4 - 5
SPN: 1237
possible FMI:
12. Errormode not identifiable
12. Errormode not identifiable
12. Errormode not identifiable
2: data stream is defective

Errordetection
Errorlamp shows permanent light. Entry in errormemory.

Possible reason for error
Switch is blocked, taster locked, connection cable demaged

Take actions for error repair
Check cabling, if sensor not working, check switch and if necessary replace it, check connection cable and if necessary repair or replace it

other error properties
System reaction: Warning
Behaviour error lamp: permanent light
Selfhealing: yes
Signal Priority: 2
Measurement @ errortime: actual value

201 / 175 / OTSCD

Error description OIL TEMP. SENSOR
Oil temperature sensor: the voltage of sensor measured by ECU is out of the target range; the oil temperature calculated by ECU is implausible compared with coolant temperature or the received value via CAN is defective

Error codes
DEUTZ-Errorcode: 201
BlinkCode (short-long-short): 1 - 4 - 4
SPN: 175
possible FMI:
3: Voltage to high or short circuit to +Ubatt
4: Voltage to low or short circuit to -Ubatt
2: data stream is defective
2: data stream is defective

Errordetection
Errorlamp shows permanent light. Entry in errormemory.

Possible reason for error
Cable break or short circuit, sensor defective, connection cable demaged

Take actions for error repair
Check cabling, if sensor not working, check switch and if necessary replace it, check connection cable and if necessary repair or replace it

other error properties
System reaction: Warning, substitute value
Behaviour error lamp: permanent light
Selfhealing: yes
Signal Priority: 4
Measurement @ errortime: default value

203 / 175 / OTSCDSysReac

Error description OIL TEMP. SENSOR

Oil temperature: the oil temperature calculated by ECU is above the target range; the ECU activates a system reaction

Error codes

DEUTZ-Errorcode: 203
BlinkCode (short-long-short): 1 - 4 - 4
SPN: 175
possible FMI:
0: data valid, but above normal working area
0: data valid, but above normal working area
12. Errormode not identifiable
12. Errormode not identifiable

Errordetection

Errorlamp shows permanent light
oder
blinking. Entry in errormemory.

Possible reason for error

Above target range with system reaction, oil volume too small, oil loop disturbed, sensor defective, connection cable demaged

Take actions for error repair

Check cycle cooling system and compressor, check oil level and if necessary correct it, check sensor and if necessary replace it, check oil loop and if necessary repair it, check connection cable and if necessary repair or replace it

other error properties

System reaction: Advice: OTSCD_stSysReacReq
Behaviour error lamp: permanent light
oder
blinking
Selfhealing: yes
Signal Priority: 4
Measurement @ errortime: actual value

208 / 523470 / PRVMon

Error description RAIL PRESS. LIM. VALVE

Rail pressure relief valve: is open, will be forced to open, the forced-open failed

Error codes

DEUTZ-Errorcode: 208
BlinkCode (short-long-short): 1 - 4 - 6
SPN: 523470
possible FMI:
14: Special Instructions
2: data stream is defective
12: Defective component
12. Errormode not identifiable

Errordetection

Errorlamp shows permanent light, 15s before shut off. Entry in errormemory.

Possible reason for error

Rail pressure relief valve open or forced open abortive (interpretation of the rail pressure gradient), operating voltage too low, rail pressure sensor defective, fuel metering unit defective, rail pressure relief valve defective, air in fuel system

Take actions for error repair

Check working voltage and if necessary correct it, check rail-pressure sensor and if necessary replace it, check FCU and if necessary replace it, check rail pressure relief valve and if necessary replace it, bleed the fuel-system

other error properties

System reaction: Warning, shut the engine off in about 5 minutes
Behaviour error lamp: permanent light, 15s before shut off
Selfhealing: no
Signal Priority: 4
Measurement @ errortime: actual value

209 / 157 / RailCD

Error description RAIL PRESS. SENSOR

Rail pressure sensor: the voltage of sensor measured by ECU is out of the target range

Error codes

DEUTZ-Errorcode: 209
BlinkCode (short-long-short): 1 - 4 - 7
SPN: 157
possible FMI:
3: Voltage to high or short circuit to +Ubatt
4: Voltage to low or short circuit to -Ubatt
12. Errormode not identifiable
12. Errormode not identifiable

Errordetection

Errorlamp shows permanent light, 15s before shut off. Entry in errormemory.

Possible reason for error

Cable break or short circuit, sensor defective, connection cable demaged

Take actions for error repair

Check cabling, check rail pressure sensor and if necessary replace it, check connection cable and if necessary repair or replace it

other error properties

System reaction: Warning, max.extraction of FCU --> open rail pressure relief valve --> shut the engine off in about 5 minutes
Behaviour error lamp: permanent light, 15s before shut off
Selfhealing: no
Signal Priority: 4
Measurement @ errortime: default value

210 / 157 / RailCDOfsTst

Error description RAIL PRESS. SENSOR
Rail pressure sensor: the change of the voltage measured by ECU during the engine start or the after-run is out of the target range

Error codes
DEUTZ-Errorcode: 210
BlinkCode (short-long-short): 1 - 4 - 7
SPN: 157
possible FMI:
0: data valid, but above normal working area
1: data valid, but below normal working area
12. Errormode not identifiable
12. Errormode not identifiable

Errordetection
Errorlamp shows permanent light. Entry in errormemory.

Possible reason for error
Deviation of signal during start or after-run above target range, sensor defective

Take actions for error repair
Replace sensor

other error properties
System reaction: Warning
Behaviour error lamp: permanent light
Selfhealing: yes
Signal Priority: 2
Measurement @ errortime: actual value

211 / 523613 / RailMeUn0

Error description RAIL PRESSURE
Rail pressure: the fuel pressure in rail calculated by ECU is above the target range which is dependant on the engine speed

Error codes
DEUTZ-Errorcode: 211
BlinkCode (short-long-short): 1 - 3 - 4
SPN: 523613
possible FMI:
0: data valid, but above normal working area
12. Errormode not identifiable
12. Errormode not identifiable
12. Errormode not identifiable

Errordetection
Errorlamp shows permanent light
oder
blinking. Entry in errormemory.

Possible reason for error
1) Leakage in high pressure system (external) ,
2) Leakage at rail pressure relief valve (internal),
3) Needle clampt in open position,
4) Abrasion at injector,
5) Abrasion at high pressure pump,
6) Too low primary pressure on low pressure side, sensor d

Take actions for error repair
(A) Check for leakage
(B) Chek fuel-primary pressure
(C) Change components, check sensor and if necessary replace it, check fuel system and if necessary repair it

other error properties
System reaction: Warning or Warning and power reduction
Behaviour error lamp: permanent light
oder
blinking
Selfhealing: yes
Signal Priority: 4
Measurement @ errortime: actual value

212 / 523613 / RailMeUn1

Error description RAIL PRESSURE
Rail pressure: the fuel pressure in rail calculated by ECU is above the target range which is dependant on the volume flow rate

Error codes
DEUTZ-Errorcode: 212
BlinkCode (short-long-short): 1 - 3 - 4
SPN: 523613
possible FMI:
0: data valid, but above normal working area
12. Errormode not identifiable
12. Errormode not identifiable
12. Errormode not identifiable

Errordetection
Errorlamp shows permanent light
oder
blinking. Entry in errormemory.

Possible reason for error
1) Leakage in high pressure system (external) ,
2) Leakage at rail pressure relief valve (internal),
3) Needle clampt in open position,
4) Abrasion at injector,
5) Abrasion at high pressure pump,
6) Too low primary pressure on low pressure side, sensor d

Take actions for error repair
(A) Check for leakage
(B) Chek fuel-primary pressure
(C) Change components, check sensor and if necessary replace it, check fuel system and if necessary repair it

other error properties
System reaction: Warning or Warning and power reduction
Behaviour error lamp: permanent light
oder
blinking
Selfhealing: yes
Signal Priority: 4
Measurement @ errortime: actual value

213 / 523613 / RailMeUn2

Error description RAIL PRESSURE

Rail pressure: the fuel pressure in rail calculated by ECU is underneath the target range which is dependant on the engine speed

Error codes

DEUTZ-Errorcode: 213
BlinkCode (short-long-short): 1 - 3 - 4
SPN: 523613
possible FMI:
0: data valid, but above normal working area
12. Errormode not identifiable
12. Errormode not identifiable
12. Errormode not identifiable

Errordetection

Errorlamp shows permanent light
oder
blinking. Entry in errormemory.

Possible reason for error

1) No power supply in FCU,
2) ZME clamped in open position,
3) Too high pressure nach Nullförderdrossel (FCU),
4) Nullförderdrossel clogged,
5) Too high primary pressure on low pressure side, sensor defective, fuel system disturbed

Take actions for error repair

(A) Check return-pressure FCU
(B) Check flow-pressure
(C) Change FCU, check sensor and if necessary replace it, check fuel system and if necessary repair it

other error properties

System reaction: Warning or Warning and power reduction
Behaviour error lamp: permanent light
oder
blinking
Selfhealing: yes
Signal Priority: 4
Measurement @ errortime: actual value

214 / 523613 / RailMeUn3

Error description RAIL PRESSURE

Rail pressure: the fuel pressure in rail calculated by ECU is underneath the target range which is dependant on the volume flow rate

Error codes

DEUTZ-Errorcode: 214
BlinkCode (short-long-short): 1 - 3 - 4
SPN: 523613
possible FMI:
1: data valid, but below normal working area
12. Errormode not identifiable
12. Errormode not identifiable
12. Errormode not identifiable

Errordetection

Errorlamp shows permanent light
oder
blinking. Entry in errormemory.

Possible reason for error

1) Leakage in high pressure system (external) ,
2) Leakage at rail pressure relief valve (internal),
3) Needle clampt in open position,
4) Abrasion at injector,
5) Abrasion at high pressure pump,
6) Too low primary pressure on low pressure side, sensor d

Take actions for error repair

(A) Check for leakage
(B) Chek fuel-primary pressure
(C) Change components, check sensor and if necessary replace it, check fuel system and if necessary repair it

other error properties

System reaction: Warning or Warning and power reduction
Behaviour error lamp: permanent light
oder
blinking
Selfhealing: yes
Signal Priority: 4
Measurement @ errortime: actual value

215 / 523613 / RailMeUn4

Error description RAIL PRESSURE

Rail pressure: the fuel pressure in rail calculated by ECU is above the absolute target range

Error codes

DEUTZ-Errorcode: 215
BlinkCode (short-long-short): 1 - 3 - 4
SPN: 523613
possible FMI:
0: data valid, but above normal working area
12. Errormode not identifiable
12. Errormode not identifiable
12. Errormode not identifiable

Errordetection

Errorlamp shows permanent light
oder
blinking. Entry in errormemory.

Possible reason for error

1) No power supply in FCU,
2) ZME clamped in open position,
3) Too high pressure nach Nullförderdrossel (FCU),
4) Nullförderdrossel clogged,
5) Too high primary pressure on low pressure side, sensor defective, fuel system disturbed

Take actions for error repair

(A) Check return-pressure FCU
(B) Check flow-pressure
(C) Change FCU, check sensor and if necessary replace it, check fuel system and if necessary repair it

other error properties

System reaction: Warning or Warning and power reduction
Behaviour error lamp: permanent light
oder
blinking
Selfhealing: yes
Signal Priority: 4
Measurement @ errortime: actual value

216 / 523613 / RailMeUn7

Error description RAIL PRESSURE

Rail pressure: the fuel pressure in rail calculated by ECU is implausible compared with the setpoint setting of the fuel metering unit

Error codes

DEUTZ-Errorcode: 216
BlinkCode (short-long-short): 1 - 3 - 4
SPN: 523613
possible FMI:
2: data stream is defective
12. Errormode not identifiable
12. Errormode not identifiable
12. Errormode not identifiable

Errordetection

Errorlamp shows permanent light
oder
blinking. Entry in errormemory.

Possible reason for error

1) Leakage in high pressure system (external) ,
2) Leakage at rail pressure relief valve (internal),
3) Needle clampt in open position,
4) Abrasion at injector,
5) Abrasion at high pressure pump,
6) Too low primary pressure on low pressure side, sensor d

Take actions for error repair

(A) Check for leakage
(B) Chek fuel-primary pressure
(C) Change components, check sensor and if necessary replace it, check fuel system and if necessary repair it

other error properties

System reaction: Warning or Warning and power reduction
Behaviour error lamp: permanent light
oder
blinking
Selfhealing: yes
Signal Priority: 4
Measurement @ errortime: actual value

218 / 523490 / SOPTst

Error description REDUNDANT SHUT OFF DET.

Internal hardware monitoring: the ECU finds an disturbance in the redundant switch off path through a test during the ramp up phase

Error codes

DEUTZ-Errorcode: 218
BlinkCode (short-long-short): 1 - 4 - 9
SPN: 523490
possible FMI:
12. Errormode not identifiable
12: Defective component
3: Voltage to high or short circuit to +Ubatt
4: Voltage to low or short circuit to -Ubatt

Errordetection

Errorlamp shows permanent light. Entry in errormemory.

Possible reason for error

Test of redundant shut-off paths

Take actions for error repair

Could be triggered by over/undervoltage or external Watchdog

other error properties

System reaction: Test will only be executed with ECU Initialisation. Warning, dependent upon application.
Behaviour error lamp: permanent light
Selfhealing: no
Signal Priority: 4
Measurement @ errortime: -

219 / 1079 / SSpMon1

Error description 5V SUPPLY 1 FAIL.

Internal hardware monitoring: the ECU detects a deviation of the target range of the power supply voltage of sensor 1

Error codes

DEUTZ-Errorcode: 219
BlinkCode (short-long-short): 2 - 8 - 2
SPN: 1079
possible FMI:
3: Voltage to high or short circuit to +Ubatt
4: Voltage to low or short circuit to -Ubatt
12. Errormode not identifiable
12. Errormode not identifiable

Errordetection

Errorlamp shows permanent light. Entry in errormemory.

Possible reason for error

5V sensor supply voltage 1 outside target range, operating voltage too high or to low, connection cable demaged, ECU defective

Take actions for error repair

If error not removable, change ECU, check cabling of external components, check working voltage and if necessary correct it, check connection cable and if necessary repair or replace it

other error properties

System reaction: Warning
Behaviour error lamp: permanent light
Selfhealing: yes
Signal Priority: 3
Measurement @ errortime: actual value

221 / 1080 / SSpMon2

Error description 5V SUPPLY 2 FAIL.
Internal hardware monitoring: the ECU detects a deviation of the target range of the power supply voltage of sensor 2

Error codes
DEUTZ-Errorcode: 221
BlinkCode (short-long-short): 2 - 8 - 2
SPN: 1080
possible FMI:
3: Voltage to high or short circuit to +Ubatt
4: Voltage to low or short circuit to -Ubatt
12. Errormode not identifiable
12. Errormode not identifiable

Errordetection
Errorlamp shows permanent light. Entry in errormemory.

Possible reason for error
5V sensor supply voltage 2 outside target range, operating voltage too high or to low, connection cable demaged, ECU defective

Take actions for error repair
If error not removable, change ECU, check cabling of external components, check working voltage and if necessary correct it, check connection cable and if necessary repair or replace it

other error properties
System reaction: Warning
Behaviour error lamp: permanent light
Selfhealing: yes
Signal Priority: 3
Measurement @ errortime: actual value

222 / 523601 / SSpMon3

Error description 5V SUPPLY 3 FAIL.
Internal hardware monitoring: the ECU detects a deviation of the target range of the power supply voltage of sensor 3

Error codes
DEUTZ-Errorcode: 222
BlinkCode (short-long-short): 2 - 8 - 2
SPN: 523601
possible FMI:
3: Voltage to high or short circuit to +Ubatt
4: Voltage to low or short circuit to -Ubatt
12. Errormode not identifiable
12. Errormode not identifiable

Errordetection
Errorlamp shows permanent light. Entry in errormemory.

Possible reason for error
Wrong voltage of internal 5V reference source 3, operating voltage too high or too low, connection cable demaged, ECU defective

Take actions for error repair
If error not removable, change ECU, check cabling of external components, check working voltage and if necessary correct it, check connection cable and if necessary repair or replace it

other error properties
System reaction: Warning
Behaviour error lamp: permanent light
Selfhealing: yes
Signal Priority: 3
Measurement @ errortime: actual value

223 / 677 / StrtCDHS

Error description START RELAY
Start relay (high side power stage): the current drain measured by ECU is above the target range

Error codes
DEUTZ-Errorcode: 223
BlinkCode (short-long-short): 5 - 1 - 2
SPN: 677
possible FMI:
3: Voltage to high or short circuit to +Ubatt
4: Voltage to low or short circuit to -Ubatt
12. Errormode not identifiable
12. Errormode not identifiable

Errordetection
Errorlamp shows permanent light. Entry in errormemory.

Possible reason for error
Start relay (high side): short circuit, relay defective, conncection cable defective

Take actions for error repair
Check cabling and start relay and if necessary replace it, check connection cable and if necessary repair or replace it

other error properties
System reaction: Warning, shutoff output
Behaviour error lamp: permanent light
Selfhealing: no
Signal Priority: 1
Measurement @ errortime: default value

224 / 677 / StrtCDLS

Error description START RELAY
start relay (low side power stage): the current drain measured by ECU is out of the target range

Error codes
DEUTZ-Errorcode: 224
BlinkCode (short-long-short): 5 - 1 - 2
SPN: 677
possible FMI:
3: Voltage to high or short circuit to +Ubatt
4: Voltage to low or short circuit to -Ubatt
5: current to low or broken wire
12. Errormode not identifiable

Errordetection
Errorlamp shows permanent light. Entry in errormemory.

Possible reason for error
Start relay (low side): cable break or short circuit, disabled by ECU, relay defective, connection cable demaged

Take actions for error repair
Check cabling and start relay and if necessary replace it, check connection cable and if necessary repair or replace it

other error properties
System reaction: Warning, shutoff output
Behaviour error lamp: permanent light
Selfhealing: no
Signal Priority: 1
Measurement @ errortime: default value

225 / 624 / SysLamp

Error description DIAGNOSTIC LAMP
Error lamp (diagnositic lamp): the current drain measured by ECU is out of the target range or the maximum permissble temperature of the ECU component for power supply of the lamp is exceeded

Error codes
DEUTZ-Errorcode: 225
BlinkCode (short-long-short): 5 - 1 - 3
SPN: 624
possible FMI:
3: Voltage to high or short circuit to +Ubatt
4: Voltage to low or short circuit to -Ubatt
5: current to low or broken wire
2: data stream is defective

Errordetection
Errorlamp shows -. Entry in errormemory.

Possible reason for error
Cable break or short circuit, disabled by ECU, lamp defective, connection cable demaged

Take actions for error repair
Check cabling and load, check lamp and if necessary replace it, check connection cable and if necessary repair or replace it

other error properties
System reaction: only error memory item
Behaviour error lamp: -
Selfhealing: no
Signal Priority: 2
Measurement @ errortime: setpoint Diagnosticlamp

226 / 158 / T15CD

Error description TERMINAL 15
Terminal 15: ECU receives no signal

Error codes
DEUTZ-Errorcode: 226
BlinkCode (short-long-short): 5 - 1 - 4
SPN: 158
possible FMI:
12. Errormode not identifiable
12. Errormode not identifiable
12: Defective component
12. Errormode not identifiable

Errordetection
Errorlamp shows permanent light. Entry in errormemory.

Possible reason for error
Ignition ON not detected, ignition switch defective, connection cable demaged

Take actions for error repair
Check cabling, if sensor not working, check ignition switch and if necessary replace it, check connection cable and if necessary repair or replace it

other error properties
System reaction: Warning, engine can not start
Behaviour error lamp: permanent light
Selfhealing: no
Signal Priority: 2
Measurement @ errortime: actual value

227 / 523550 / T50CD

Error description TERMINAL 50
Terminal 50: ECU receives a permanent signal

Error codes
DEUTZ-Errorcode: 227
BlinkCode (short-long-short): 5 - 1 - 5
SPN: 523550
possible FMI:
12: Defective component
12. Errormode not identifiable
12. Errormode not identifiable
12. Errormode not identifiable

Errordetection
Errorlamp shows permanent light. Entry in errormemory.

Possible reason for error
Engine start switch stuck, start switch clamped, connection cable demaged

Take actions for error repair
Check cabling, if sensor not working, check start switch and if necessary replace it, check connection cable and if necessary repair or replace it

other error properties
System reaction: Warning
Behaviour error lamp: permanent light
Selfhealing: no
Signal Priority: 1
Measurement @ errortime: actual value

228 / 523550 / TPUMon

Error description TERMINAL 50
Internal hardware monitoring: ECU detects a deviation between the signal of time module and the system time

Error codes
DEUTZ-Errorcode: 228
BlinkCode (short-long-short): 5 - 5 - 5
SPN: 523550
possible FMI:
12. Errormode not identifiable
12. Errormode not identifiable
12. Errormode not identifiable
2: data stream is defective

Errordetection
Errorlamp shows blinking. Entry in errormemory.

Possible reason for error
Time processing unit (TPU) defective, ECU defective

Take actions for error repair
If error not removable, change ECU

other error properties
System reaction: Recovery of ECU
Behaviour error lamp: blinking
Selfhealing: no
Signal Priority: 5
Measurement @ errortime: -

232 / 84 / VSSCD1

Error description VEHICLE SPEED
Vehicle speed: over the maximum, signal invalid or implausible compared with the injection quantity and the engine speed, offset factors unlearned

Error codes
DEUTZ-Errorcode: 232
BlinkCode (short-long-short): 5 - 2 - 1
SPN: 84
possible FMI:
0: data valid, but above normal working area
12: Defective component
8: unusual frequency, pulse or period.
14: Special Instructions

Errordetection
Errorlamp shows permanent light. Entry in errormemory.

Possible reason for error
Speed above target range, signal invalid or implausible compared to injection volume and engine speed, distance factor not learned, sensor defective, connection cable demaged

Take actions for error repair
Check cabling, if sensor not working, check sensor and if necessary replace it, check connection cable and if necessary repair or replace it

other error properties
System reaction: Warning
Behaviour error lamp: permanent light
Selfhealing: yes
Signal Priority: 3
Measurement @ errortime: default value

235 / 523600 / WdCom

Error description SERIAL INTERFACE DEF.
Internal hardware monitoring: the ECU detects a disturbance in internal communication

Error codes
DEUTZ-Errorcode: 235
BlinkCode (short-long-short): 5 - 5 - 5
SPN: 523600
possible FMI:
12. Errormode not identifiable
12. Errormode not identifiable
12. Errormode not identifiable
12: Defective component

Errordetection
Errorlamp shows blinking. Entry in errormemory.

Possible reason for error
Communication disturbed, ECU defective

Take actions for error repair
If error not to removable, change ECU

other error properties
System reaction: Recovery of ECU
Behaviour error lamp: blinking
Selfhealing: no
Signal Priority: 5
Measurement @ errortime: -

236 / 523470 / PRVMonSysReac

Error description RAIL PRESS. LIM. VALVE
Rail pressure relief valve: is open, will be forced to open, the forced-open failed; the ECU activates a system reaction

Error codes
DEUTZ-Errorcode: 236
BlinkCode (short-long-short): 1 - 4 - 6
SPN: 523470
possible FMI:
12: Defective component
12: Defective component
12. Errormode not identifiable
12. Errormode not identifiable

Errordetection
Errorlamp shows permanent light, 15s before shut off. Entry in errormemory.

Possible reason for error
Rail pressure relief valve open or forced open abortive (interpretation of the rail pressure gradient), power supply voltage too low, rail pressure sensor defective, fuel metering unit defective, rail pressure relief valve defective, air in fuel system

Take actions for error repair
Check working voltage and if necessary correct it, check rail-pressure sensor and if necessary replace it, check FCU and if necessary replace it, check rail pressure relief valve and if necessary replace it, bleed the fuel-system

other error properties
System reaction: Warning, shut the engine off in about 5 minutes
Behaviour error lamp: permanent light, 15s before shut off
Selfhealing: no
Signal Priority: 4
Measurement @ errortime: actual value

237 / 523006 / APPCDSwtnSel

Error description CONTR. MODE SWITCH
Controller mode switch: the signal received by ECU is defective or implausible.

Error codes
DEUTZ-Errorcode: 237
BlinkCode (short-long-short): 2 - 4 - 2
SPN: 523006
possible FMI:
3: Voltage to high or short circuit to +Ubatt
4: Voltage to low or short circuit to -Ubatt
2: data stream is defective
12. Errormode not identifiable

Errordetection
Errorlamp shows permanent light. Entry in errormemory.

Possible reason for error
Cable break, signal implausible, switch defective, connection cable demaged

Take actions for error repair
Check switch and if necessary replace it, check connection cable and if necessary repair or replace it

other error properties
System reaction:
Behaviour error lamp: permanent light
Selfhealing: yes
Signal Priority: 2
Measurement @ errortime: actual value

238 / 523007 / FrmMng_TORxEngPress

Error description CAN ERROR RxEngPress.

Error codes

DEUTZ-Errorcode: 238
BlinkCode (short-long-short): 2 - 1 - 5
SPN: 523007
possible FMI:
12: Defective component
12. Errormode not identifiable
12. Errormode not identifiable
12. Errormode not identifiable

Errordetection

Errorlamp shows permanent light. Entry in errormemory.

Possible reason for error

Take actions for error repair

other error properties

System reaction:
Behaviour error lamp: permanent light
Selfhealing: yes
Signal Priority: 1
Measurement @ errortime: default value

239 / 523008 / MplCtl

Error description MANIPULATION CONTROL

Data monitoring: the torque curve does not match the specification

Error codes

DEUTZ-Errorcode: 239
BlinkCode (short-long-short): 4 - 2 - 4
SPN: 523008
possible FMI:
1: data valid, but below normal working area
2: data stream is defective
12. Errormode not identifiable
12. Errormode not identifiable

Errordetection

Errorlamp shows . Entry in errormemory.

Possible reason for error

Manipulation of Topcurve detected, data manipulation, too slow changed curve

Take actions for error repair

other error properties

System reaction:
Behaviour error lamp:
Selfhealing: -
Signal Priority: 3
Measurement @ errortime:

240 / 98 / OLSCD

Error description OIL LEVEL SWITCH

Oil level sensor: the voltage of sensor measured by ECU is out of the target range or the received value of oil level via CAN is defective or the signal value is implausible

Error codes

DEUTZ-Errorcode: 240
BlinkCode (short-long-short): 2 - 1 - 1
SPN: 98
possible FMI:
3: Voltage to high or short circuit to +Ubatt
4: Voltage to low or short circuit to -Ubatt
2: data stream is defective
2: data stream is defective

Errordetection

Errorlamp shows permanent light. Entry in errormemory.

Possible reason for error

Voltage outside target range, CAN signal error, signal implausible, sensor defective, connection cable demaged, CAN bus wrong cabled, wiring demaged, receiver (sender of the message) work inaccurately, parametering inaccurate

Take actions for error repair

Check cabling, if sensor not working, check sensor and if necessary replace it, check connection cable and if necessary repair or replace it, Check CAN Bus cabling (Bus sheduling, polarity, short circuit, power interrupt), test protocol of receiver, chec

other error properties

System reaction: Warning, substitute value
Behaviour error lamp: permanent light
Selfhealing: yes
Signal Priority: 3
Measurement @ errortime: default value

241 / 98 / OLSCDSysReacHi

Error description OIL LEVEL SWITCH
Oil level: the oil level calculated by ECU is above the target range; the ECU activates a system reaction

Error codes
DEUTZ-Errorcode: 241
BlinkCode (short-long-short): 2 - 5 - 1
SPN: 98
possible FMI:
0: data valid, but above normal working area
12. Errormode not identifiable
12. Errormode not identifiable
12. Errormode not identifiable

Errordetection
Errorlamp shows permanent light. Entry in errormemory.

Possible reason for error
Oil level too high with system reaction, oil volume too large, sensor defective, connection cable demaged, CAN data error

Take actions for error repair
Check oil level and if necessary correct it, check sensor and if necessary replace it, check connection cable and if necessary repair or replace it

other error properties
System reaction: Advice: OLSCD_stSysReacReq
Behaviour error lamp: permanent light
Selfhealing: yes
Signal Priority: 4
Measurement @ errortime: actual value

242 / 107 / ADPSCDAna

Error description AIR FILTER COND.
Air filter differential pressure sensor: the voltage of sensor measured by ECU is out of the target range

Error codes
DEUTZ-Errorcode: 242
BlinkCode (short-long-short): 1 - 3 - 6
SPN: 107
possible FMI:
3: Voltage to high or short circuit to +Ubatt
4: Voltage to low or short circuit to -Ubatt
12. Errormode not identifiable
12. Errormode not identifiable

Errordetection
Errorlamp shows permanent light. Entry in errormemory.

Possible reason for error
Voltage outside target range, sensor defective, connection cable demaged

Take actions for error repair
Check cable harness, check sensor and if necessary replace it, check connection cable and if necessary repair or replace it

other error properties
System reaction: Warning, substitute value
Behaviour error lamp: permanent light
Selfhealing: yes
Signal Priority: 3
Measurement @ errortime: default value

243 / 98 / OLSCDSysReacLo

Error description OIL LEVEL SWITCH
Oil level: the oil level calculated by ECU is underneath the target range; the ECU activates a system reaction

Error codes
DEUTZ-Errorcode: 243
BlinkCode (short-long-short): 2 - 5 - 2
SPN: 98
possible FMI:
1: data valid, but below normal working area
12. Errormode not identifiable
12. Errormode not identifiable
12. Errormode not identifiable

Errordetection
Errorlamp shows permanent light. Entry in errormemory.

Possible reason for error
Oil level too low with system reaction, oil volume too small, sensor defective, connection cable demaged, CAN data error

Take actions for error repair
Check oil level and if necessary correct it, check sensor and if necessary replace it, check connection cable and if necessary repair or replace it

other error properties
System reaction: Advice: OLSCD_stSysReacReq
Behaviour error lamp: permanent light
Selfhealing: yes
Signal Priority: 4
Measurement @ errortime: actual value

244 / 523009 / PrvMonWear

Error description REPL. RAIL PRESS. VALVE

Rail pressure relief valve: is open more frequently or for a longer time than what the technical specification allows

Error codes

DEUTZ-Errorcode: 244
BlinkCode (short-long-short): 2 - 5 - 3
SPN: 523009
possible FMI:
9: Abnormal update rated
10: Abnormal rate of change
14: Special Instructions
12. Errormode not identifiable

Errordetection

Errorlamp shows permanent light. Entry in errormemory.

Possible reason for error

Rail pressure relief valve open more frequently than the technical specification allowed, rail pressure relief valve open longer than the technical specification allowed, rail pressure relief valve defective

Take actions for error repair

Change rail pressure relief valve and remove the error through Serdia command

other error properties

System reaction: permanent error message, unerasable by "Clear EM"
Behaviour error lamp: permanent light
Selfhealing: no
Signal Priority: 3
Measurement @ errortime: actual value

245 / 523010 / RailMeUn8

Error description LEAKAGE DETECTION

Wenn the engine is in idle running, the metering unit compares its output and rail pressure with the default value (Parameter) and calculates a correction factor-it calibrates itself then

Error codes

DEUTZ-Errorcode: 245
BlinkCode (short-long-short): 2 - 5 - 4
SPN: 523010
possible FMI:
0: data valid, but above normal working area
12. Errormode not identifiable
12. Errormode not identifiable
12. Errormode not identifiable

Errordetection

Errorlamp shows permanent light. Entry in errormemory.

Possible reason for error

Take actions for error repair

other error properties

System reaction:
Behaviour error lamp: permanent light
Selfhealing: no
Signal Priority: 3
Measurement @ errortime: actual value

246 / 523650 / FlSys_FLPFMSysReac

Error description

Low fuel pressure Diesel: the low fuel pressure calculated by ECU is underneath the target range; the ECU activates a system reaction

Error codes

DEUTZ-Errorcode: 246
BlinkCode (short-long-short): 5 - 4 - 1
SPN: 523650
possible FMI:
2: data stream is defective
2: data stream is defective
12. Errormode not identifiable
12. Errormode not identifiable

Errordetection

Errorlamp shows permanent light. Entry in errormemory.

Possible reason for error

Diesel fuel pressure below target range with system reaction, interruption in cycling process of low fuel pressure (for example, fuel pump defective), sensor defective, connection cable demaged

Take actions for error repair

Check Diesel low fuel pressure loop system, Check electrical fuel pump, inspect fuel system and if necessary repair it, check sensor and if necessary replace it, check connection cable and if necessary repair or replace it

other error properties

System reaction: Warning
Behaviour error lamp: permanent light
Selfhealing: yes
Signal Priority: 4
Measurement @ errortime: default value

247 / 523651 / FlSys_FTSFMSysReac

Error description
Rape Oil Fuel temperature: the fuel temperature calculated by ECU is above the target range; the ECU activates a system reaction

Error codes
DEUTZ-Errorcode: 247
BlinkCode (short-long-short): 5 - 4 - 2
SPN: 523651
possible FMI:
2: data stream is defective
2: data stream is defective
12. Errormode not identifiable
12. Errormode not identifiable

Errordetection
Errorlamp shows permanent light. Entry in errormemory.

Possible reason for error
Rape oil fuel temperature above target range with system reaction, interruption of rape oil fuel loop (for example, heat exchanger not working properly), sensor defective, connection cable demaged

Take actions for error repair
Check rape oil fuel system as well as heat exchanger and heat exchanger valve, if necessary repair it, check sensor and if necessary replace it, check connection cable and if necessary repair or replace it

other error properties
System reaction: Warning and switchover to Diesel operation mode
Behaviour error lamp: permanent light
Selfhealing: yes
Signal Priority: 3
Measurement @ errortime: default value

248 / 523652 / FlSys_FlushStateEngineOff

Error description
Engine shut off without flushing or flushing was not already completed. ECU stores every shutoff with uncompleted or missing flushing process

Error codes
DEUTZ-Errorcode: 248
BlinkCode (short-long-short): 5 - 4 - 3
SPN: 523652
possible FMI:
2: data stream is defective
12. Errormode not identifiable
12. Errormode not identifiable
12. Errormode not identifiable

Errordetection
Errorlamp shows permanent light. Entry in errormemory.

Possible reason for error
Engine shut off without flushing of the fuel system in Diesel operation mode, Shutoff before flushing in Diesel operation mode was finished

Take actions for error repair
Awaiting complete flushing of the fuel system everytime before engine shut off

other error properties
System reaction: Warning
Behaviour error lamp: permanent light
Selfhealing: yes
Signal Priority: 3
Measurement @ errortime: -

249 / 523653 / FlSys_RapeOilHeatEx

Error description RAPEOILSYSTEM
Awaited temperatur rise with opened heat exchanger valve did not occur. Error in fuel heating system.

Error codes
DEUTZ-Errorcode: 249
BlinkCode (short-long-short): 5 - 4 - 4
SPN: 523653
possible FMI:
2: data stream is defective
12. Errormode not identifiable
12. Errormode not identifiable
12. Errormode not identifiable

Errordetection
Errorlamp shows permanent light. Entry in errormemory.

Possible reason for error
Fuel heating system (heat exchanger) not working correctly

Take actions for error repair
Check Heat exchanger and heat exchanger valve, check cooling system going to the heat exchanger, check rape oil system going to the heat exchanger

other error properties
System reaction: Warning
Behaviour error lamp: permanent light
Selfhealing: yes
Signal Priority: 3
Measurement @ errortime: -

250 / 523654 / FrmMngDieselLvl

Error description RAPEOILSYSTEM
Status DieselLvl (Diesel tank level): the voltage of the sensor measured by ECU is out of the target range

Error codes
DEUTZ-Errorcode: 250
BlinkCode (short-long-short): 5 - 4 - 5
SPN: 523654
possible FMI:
3: Voltage to high or short circuit to +Ubatt
4: Voltage to low or short circuit to -Ubatt
12. Errormode not identifiable
12. Errormode not identifiable

Errordetection
Errorlamp shows permanent light. Entry in errormemory.

Possible reason for error
Cable break or short circuit, sensor defective, connection cable demaged

Take actions for error repair
Check cabling, if sensor not working, check sensor and if necessary replace it, check connection cable and if necessary repair or replace it

other error properties
System reaction: Warning, substitute value
Behaviour error lamp: permanent light
Selfhealing: yes
Signal Priority: 3
Measurement @ errortime: default value

251 / 523655 / FrmMngFuelTemp

Error description RAPEOILSYSTEM
Status FuelTemp (Fuel Temperature): the voltage of the sensor measured by ECU is out of the target range

Error codes
DEUTZ-Errorcode: 251
BlinkCode (short-long-short): 5 - 4 - 6
SPN: 523655
possible FMI:
3: Voltage to high or short circuit to +Ubatt
4: Voltage to low or short circuit to -Ubatt
12. Errormode not identifiable
12. Errormode not identifiable

Errordetection
Errorlamp shows permanent light. Entry in errormemory.

Possible reason for error
Cable break or short circuit, lamp defective, connection cable demaged

Take actions for error repair
Check cabling, if sensor not working, check sensor and if necessary replace it, check connection cable and if necessary repair or replace it

other error properties
System reaction: Warning, substitute value
Behaviour error lamp: permanent light
Selfhealing: yes
Signal Priority: 3
Measurement @ errortime: default value

252 / 523656 / FrmMngLowPressureDiesel

Error description RAPEOILSYSTEM
Status LowPressureDiesel (Low fuel pressure diesel): the voltage of the sensor measured by ECU is out of the target range

Error codes
DEUTZ-Errorcode: 252
BlinkCode (short-long-short): 5 - 4 - 7
SPN: 523656
possible FMI:
3: Voltage to high or short circuit to +Ubatt
4: Voltage to low or short circuit to -Ubatt
12. Errormode not identifiable
12. Errormode not identifiable

Errordetection
Errorlamp shows permanent light. Entry in errormemory.

Possible reason for error
Cable break or short circuit, lamp defective, connection cable demaged

Take actions for error repair
Check cabling, if sensor not working, check sensor and if necessary replace it, check connection cable and if necessary repair or replace it

other error properties
System reaction: Warning, substitute value
Behaviour error lamp: permanent light
Selfhealing: yes
Signal Priority: 3
Measurement @ errortime: default value

253 / 523657 / FrmMngRapeOilIn

Error description RAPEOILSYSTEM
CAN messageRapeOilIn (Rape oil input): the message can not be received by ECU

Error codes
DEUTZ-Errorcode: 253
BlinkCode (short-long-short): 5 - 6 - 1
SPN: 523657
possible FMI:
12: Defective component
12. Errormode not identifiable
12: Defective component
12. Errormode not identifiable

Errordetection
Errorlamp shows permanent light. Entry in errormemory.

Possible reason for error
CAN bus wrong cabled, wiring is demaged, receiver (sender of the message) work inaccurately, parametering inaccurate

Take actions for error repair
Check CAN Bus cabling (Bus sheduling, polarity, short circuit, power interrupt), test protocol of receiver, check CAN functional range

other error properties
System reaction: Warning, substitute values
Behaviour error lamp: permanent light
Selfhealing: yes
Signal Priority: 3
Measurement @ errortime: default value

254 / 523658 / FrmMngRapeOilLvl

Error description RAPEOILSYSTEM
Status RapeOilLvl (Rape oil tank level): the voltage of the sensor measured by ECU is out of the target range

Error codes
DEUTZ-Errorcode: 254
BlinkCode (short-long-short): 5 - 6 - 2
SPN: 523658
possible FMI:
3: Voltage to high or short circuit to +Ubatt
4: Voltage to low or short circuit to -Ubatt
12. Errormode not identifiable
12. Errormode not identifiable

Errordetection
Errorlamp shows permanent light. Entry in errormemory.

Possible reason for error
Cable break or short circuit, lamp defective, connection cable demaged

Take actions for error repair
Check cabling, if sensor not working, check sensor and if necessary replace it, check connection cable and if necessary repair or replace it

other error properties
System reaction: Warning, substitute value
Behaviour error lamp: permanent light
Selfhealing: yes
Signal Priority: 3
Measurement @ errortime: default value

255 / 523659 / FrmMngRapeOilVlv1

Error description RAPEOILSYSTEM
Status RapeOilVlv1 (Valve 1): the current drain measured by ECU is out of the target range or the maximum permissible temperature of the ECU component is exceeded

Error codes
DEUTZ-Errorcode: 255
BlinkCode (short-long-short): 5 - 6 - 3
SPN: 523659
possible FMI:
12. Errormode not identifiable
12. Errormode not identifiable
12: Defective component
12. Errormode not identifiable

Errordetection
Errorlamp shows permanent light. Entry in errormemory.

Possible reason for error
Cable break or short circuit, valve defective, connection cable demaged

Take actions for error repair
Check cabling, if valve not working, check valve and if necessary replace it, check connection cable and if necessary repair or replace it

other error properties
System reaction: Warning and switchover to Diesel operation mode
Behaviour error lamp: permanent light
Selfhealing: yes
Signal Priority: 3
Measurement @ errortime: default value

256 / 523660 / FrmMngRapeOilVlv2

Error description RAPEOILSYSTEM
Status RapeOilVlv2 (Valve 2): the current drain measured by ECU is out of the target range or the maximum permissible temperature of the ECU component is exceeded

Error codes
DEUTZ-Errorcode: 256
BlinkCode (short-long-short): 5 - 6 - 4
SPN: 523660
possible FMI:
12. Errormode not identifiable
12. Errormode not identifiable
12: Defective component
12. Errormode not identifiable

Errordetection
Errorlamp shows permanent light. Entry in errormemory.

Possible reason for error
Cable break or short circuit, valve defective, connection cable demaged

Take actions for error repair
Check cabling, if valve not working, check valve and if necessary replace it, check connection cable and if necessary repair or replace it

other error properties
System reaction: Warning and switchover to Diesel operation mode
Behaviour error lamp: permanent light
Selfhealing: yes
Signal Priority: 3
Measurement @ errortime: default value

257 / 523661 / FrmMngRapeOilVlv3

Error description RAPEOILSYSTEM
Status RapeOilVlv3 (Valve 3): the current drain measured by ECU is out of the target range or the maximum permissible temperature of the ECU component is exceeded

Error codes
DEUTZ-Errorcode: 257
BlinkCode (short-long-short): 5 - 6 - 5
SPN: 523661
possible FMI:
12. Errormode not identifiable
12. Errormode not identifiable
12: Defective component
12. Errormode not identifiable

Errordetection
Errorlamp shows permanent light. Entry in errormemory.

Possible reason for error
Cable break or short circuit, valve defective, connection cable demaged

Take actions for error repair
Check cabling, if valve not working, check valve and if necessary replace it, check connection cable and if necessary repair or replace it

other error properties
System reaction: Warning and switchover to Diesel operation mode
Behaviour error lamp: permanent light
Selfhealing: yes
Signal Priority: 3
Measurement @ errortime: default value

258 / 523662 / FrmMngRapeOilVlv4

Error description RAPEOILSYSTEM
Status RapeOilVlv4 (Valve 4): the current drain measured by ECU is out of the target range or the maximum permissible temperature of the ECU component is exceeded

Error codes
DEUTZ-Errorcode: 258
BlinkCode (short-long-short): 5 - 6 - 6
SPN: 523662
possible FMI:
12. Errormode not identifiable
12. Errormode not identifiable
12: Defective component
12. Errormode not identifiable

Errordetection
Errorlamp shows permanent light. Entry in errormemory.

Possible reason for error
Cable break or short circuit, valve defective, connection cable demaged

Take actions for error repair
Check cabling, if valve not working, check valve and if necessary replace it, check connection cable and if necessary repair or replace it

other error properties
System reaction: Warning
Behaviour error lamp: permanent light
Selfhealing: yes
Signal Priority: 3
Measurement @ errortime: default value

259 / 523663 / FrmMngRapeOilVlv5

Error description RAPEOILSYSTEM
Status RapeOilVlv5 (Valve 5): the current drain measured by ECU is out of the target range or the maximum permissible temperature of the ECU component is exceeded

Error codes
DEUTZ-Errorcode: 259
BlinkCode (short-long-short): 5 - 6 - 7
SPN: 523663
possible FMI:
12. Errormode not identifiable
12. Errormode not identifiable
12: Defective component
12. Errormode not identifiable

Errordetection
Errorlamp shows permanent light. Entry in errormemory.

Possible reason for error
Cable break or short circuit, valve defective, connection cable demaged

Take actions for error repair
Check cabling, if valve not working, check valve and if necessary replace it, check connection cable and if necessary repair or replace it

other error properties
System reaction: Warning
Behaviour error lamp: permanent light
Selfhealing: yes
Signal Priority: 3
Measurement @ errortime: default value

260 / 523664 / FrmMngSTIN1RX

Error description RAPEOILSYSTEM
CAN message STIN1 (State Inputs 1): the message can not be received by ECU

Error codes
DEUTZ-Errorcode: 260
BlinkCode (short-long-short): 5 - 6 - 8
SPN: 523664
possible FMI:
12: Defective component
12. Errormode not identifiable
12: Defective component
12. Errormode not identifiable

Errordetection
Errorlamp shows permanent light. Entry in errormemory.

Possible reason for error
CAN bus wrong cabled, wiring is demaged, receiver (sender of the message) work inaccurately, parametering inaccurate

Take actions for error repair
Check CAN Bus cabling (Bus sheduling, polarity, short circuit, power interrupt), test protocol of receiver, check CAN functional range

other error properties
System reaction: Warning, substitute values
Behaviour error lamp: permanent light
Selfhealing: yes
Signal Priority: 3
Measurement @ errortime: default value

ANNEXE Cummins
Défauts Cummins Tier3

Fault Code	J1939 SPN	J1939 FMI	Lamp Color	J1939 SPN Description	Cummins Description
111	629	12	Red	Controller #1	Engine Control Module Critical internal failure - Bad intelligent Device or Component
115	612	2	Red	System Diagnostic Code # 2	Engine Speed/Position Sensor Circuit lost both of two signals from the magnetic pickup sensor - Data Erratic, Intermittent, or incorrect
122	102	3	Amber	Boost Pressure	Intake Manifold Pressure Sensor Circuit – Voltage Above Normal, or Shorted to High Source
123	102	4	Amber	Boost Pressure	Intake Manifold Pressure Sensor Circuit – Voltage Below Normal, or Shorted to Low Source
131	91	3	Red	Accelerator Pedal Position	Accelerator Pedal or Lever Position Sensor Circuit - Voltage Above Normal, or Shorted to High Source
132	91	4	Red	Accelerator Pedal Position	Accelerator Pedal or Lever Position Sensor Circuit - Voltage Below Normal, or Shorted to Low Source
133	974	3	Red	Remote Accelerator	Remote Accelerator Pedal or Lever Position Sensor Circuit – Voltage Above Normal, or Shorted to High Source
134	974	4	Red	Remote Accelerator	Remote Accelerator Pedal or Lever Position Sensor Circuit – Voltage Below Normal, or Shorted to Low Source
135	100	3	Amber	Engine Oil Pressure	Oil Pressure Sensor Circuit - Voltage Above Normal, or Shorted to High Source
141	100	4	Amber	Engine Oil Pressure	Oil Pressure Sensor Circuit - Voltage Below Normal, or Shorted to Low Source
143	100	18	Amber	Engine Oil Pressure	Oil Pressure Low – Data Valid but Below Normal Operational Range - Moderately Severe Level
144	110	3	Amber	Engine Coolant Temperature	Coolant Temperature Sensor Circuit – Voltage Above Normal, or Shorted to High Source
145	110	4	Amber	Engine Coolant Temperature	Coolant Temperature Sensor Circuit – Voltage Below Normal, or Shorted to Low Source
146	110	16	Amber	Engine Coolant Temperature	Coolant Temperature High - Data Valid but Above Normal Operational Range - Moderately Severe Level
147	91	1	Red	Accelerator Pedal Position	Accelerator Pedal or Lever Position Sensor Circuit – Abnormal Frequency, Pulse Width, or Period
148	91	0	Red	Accelerator Pedal Position	Accelerator Pedal or Lever Position Sensor Circuit – Abnormal Frequency, Pulse Width, or Period
151	110	0	Red	Engine Coolant Temperature	Coolant Temperature Low - Data Valid but Above Normal Operational Range - Most Severe Level
153	105	3	Amber	Intake Manifold #1 Temp	Intake Manifold Air Temperature Sensor Circuit - Voltage Above Normal, or Shorted to High Source
154	105	4	Amber	Intake Manifold #1 Temp	Intake Manifold Air Temperature Sensor Circuit - Voltage Below Normal, or Shorted to Low Source
155	105	0	Red	Intake Manifold #1 Temp	Intake Manifold Air Temperature High – Data Valid but Above Normal Operational Range - Most Severe Level
187	1080	4	Amber	5 Volts DC Supply	Sensor Supply Voltage #2 Circuit – Voltage Below Normal, or Shorted to Low Source
195	111	3	Amber	Coolant Level	Coolant Level Sensor Circuit - Voltage Above Normal, or Shorted to High Source
196	111	4	Amber	Coolant Level	Coolant Level Sensor Circuit - Voltage Below Normal, or Shorted to Low Source
197	111	18	Amber	Coolant Level	Coolant Level - Data Valid but Below Normal Operational Range - Moderately Severe Level
211	1484	31	None	J1939 Error	Additional Auxiliary Diagnostic Codes logged - Condition Exists
212	175	3	Amber	Oil Temperature	Engine Oil Temperature Sensor 1 Circuit - Voltage Above Normal, or Shorted to High Source
213	175	4	Amber	Oil Temperature	Engine Oil Temperature Sensor 1 Circuit - Voltage Below Normal, or Shorted to Low Source

Fault Code	J1939 SPN	J1939 FMI	Lamp Color	J1939 SPN Description	Cummins Description
214	175	0	Red	Oil Temperature	Engine Oil Temperature - Data Valid but Above Normal Operational Range - Most Severe Level
221	108	3	Amber	Barometric Pressure	Barometric Pressure Sensor Circuit – Voltage Above Normal, or Shorted to High Source
222	108	4	Amber	Barometric Pressure	Barometric Pressure Sensor Circuit – Voltage Below Normal, or Shorted to Low Source
227	1080	3	Amber	5 Volts DC Supply	Sensor Supply Voltage #2 Circuit – Voltage Above Normal, or Shorted to High Source
231	109	3	Amber	Coolant Pressure	Coolant Pressure Sensor Circuit - Voltage Above Normal, or Shorted to High Source
232	109	4	Amber	Coolant Pressure	Coolant Pressure Sensor Circuit - Voltage Below Normal, or Shorted to Low Source
233	109	18	Amber	Coolant Pressure	Coolant Pressure - Data Valid but Below Normal Operational Range - Moderately Severe Level
234	190	0	Red	Engine Speed	Engine Speed High - Data Valid but Above Normal Operational Range - Most Severe Level
235	111	1	Red	Coolant Level	Coolant Level Low - Data Valid but Below Normal Operational Range - Most Severe Level
237	644	2	Amber	External Speed Input	External Speed Input (Multiple Unit Synchronization) - Data Erratic, Intermittent, or Incorrect
238	611	4	Amber	System Diagnostic code # 1	Sensor Supply Voltage #3 Circuit – Voltage Below Normal, or Shorted to Low Source
241	84	2	Amber	Wheel-based Vehicle Speed	Vehicle Speed Sensor Circuit - Data Erratic, Intermittent, or Incorrect
242	84	10	Amber	Wheel-based Vehicle Speed	Vehicle Speed Sensor Circuit tampering has been detected – Abnormal Rate of Change
245	647	4	Amber	Fan Clutch Output Device Driver	Fan Control Circuit - Voltage Below Normal, or Shorted to Low Source
249	171	3	Amber	Ambient Air Temperature	Ambient Air Temperature Sensor Circuit - Voltage Above Normal, or Shorted to High Source
256	171	4	Amber	Ambient Air Temperature	Ambient Air Temperature Sensor Circuit - Voltage Below Normal, or Shorted to Low Source
261	174	16	Amber	Fuel Temperature	Engine Fuel Temperature - Data Valid but Above Normal Operational Range - Moderately Severe Level
263	174	3	Amber	Fuel Temperature	Engine Fuel Temperature Sensor 1 Circuit - Voltage Above Normal, or Shorted to High Source
265	174	4	Amber	Fuel Temperature	Engine Fuel Temperature Sensor 1 Circuit - Voltage Below Normal, or Shorted to Low Source
268	94	2	Amber	Fuel Delivery Pressure	Fuel Pressure Sensor Circuit - Data Erratic, Intermittent, or Incorrect
271	1347	4	Amber	Fuel Pump Pressurizing Assembly #1	High Fuel Pressure Solenoid Valve Circuit – Voltage Below Normal, or Shorted to Low Source
272	1347	3	Amber	Fuel Pump Pressurizing Assembly #1	High Fuel Pressure Solenoid Valve Circuit – Voltage Above Normal, or Shorted to High Source
275	1347	7	Amber	Fuel Pump Pressurizing Assembly #1	Fuel Pumping Element (Front) – Mechanical System Not Responding Properly or Out of Adjustment
281	1347	7	Amber	Fuel Pump Pressurizing Assembly #1	High Fuel Pressure Solenoid Valve #1 – Mechanical System Not Responding Properly or Out of Adjustment
284	1043	4	Amber	Internal Sensor Voltage Supply	Engine Speed/Position Sensor (Crankshaft) Supply Voltage Circuit - Voltage Below Normal, or Shorted to Low Source
285	639	9	Amber	SAE J1939 Datalink	SAE J1939 Multiplexing PGN Timeout Error - Abnormal Update Rate
286	639	13	Amber	SAE J1939 Datalink	SAE J1939 Multiplexing Configuration Error – Out of Calibration
287	91	19	Red	Accelerator Pedal Position	SAE J1939 Multiplexing Accelerator Pedal or Lever Sensor System Error - Received Network Data In Error
288	974	19	Red	Remote Accelerator	SAE J1939 Multiplexing Remote Accelerator Pedal or Lever Data Error - Received Network Data In Error
293	441	3	Amber	OEM Temperature	Auxiliary Temperature Sensor Input # 1 Circuit - Voltage Above Normal, or Shorted to High Source

Fault Code	J1939 SPN	J1939 FMI	Lamp Color	J1939 SPN Description	Cummins Description
294	441	4	Amber	OEM Temperature	Auxiliary Temperature Sensor Input # 1 Circuit - Voltage Below Normal, or Shorted to Low Source
295	108	2	Amber	Barometric Pressure	Barometric Pressure Sensor Circuit - Data Erratic, Intermittent, or Incorrect
296	1388	14	Red	Auxiliary Pressure	Auxiliary Pressure Sensor Input 1 - Special Instructions
297	1388	3	Amber	Auxiliary Pressure	Auxiliary Pressure Sensor Input # 2 Circuit - Voltage Above Normal, or Shorted to High Source
298	1388	4	Amber	Auxiliary Pressure	Auxiliary Pressure Sensor Input # 2 Circuit - Voltage Below Normal, or Shorted to Low Source
319	251	2	Maint	Real Time Clock Power	Real Time Clock Power Interrupt - Data Erratic, Intermittent, or Incorrect
322	651	5	Amber	Injector Cylinder #01	Injector Solenoid Cylinder #1 Circuit – Current Below Normal, or Open Circuit
323	655	5	Amber	Injector Cylinder #05	Injector Solenoid Cylinder #5 Circuit – Current Below Normal, or Open Circuit
324	653	5	Amber	Injector Cylinder #03	Injector Solenoid Cylinder #3 Circuit – Current Below Normal, or Open Circuit
325	656	5	Amber	Injector Cylinder #06	Injector Solenoid Cylinder #6 Circuit – Current Below Normal, or Open Circuit
331	652	5	Amber	Injector Cylinder #02	Injector Solenoid Cylinder #2 Circuit – Current Below Normal, or Open Circuit
332	654	5	Amber	Injector Cylinder #04	Injector Solenoid Cylinder #4 Circuit – Current Below Normal, or Open Circuit
334	110	2	Amber	Engine Coolant Temperature	Coolant Temperature Sensor Circuit – Data Erratic, Intermittent, or Incorrect
338	1267	3	Amber	Vehicle Accessories Relay Driver	Idle Shutdown Vehicle Accessories Relay Driver Circuit - Voltage Above Normal, or Shorted to High Source
339	1267	4	Amber	Vehicle Accessories Relay Driver	Idle Shutdown Vehicle Accessories Relay Driver Circuit - Voltage Below Normal, or Shorted to Low Source
341	630	2	Amber	Calibration Memory	Engine Control Module data lost - Data Erratic, Intermittent, or Incorrect
342	630	13	Red	Calibration Memory	Electronic Calibration Code Incompatibility - Out of Calibration
343	629	12	Amber	Controller #1	Engine Control Module Warning internal hardware failure - Bad Intelligent Device or Component
351	629	12	Amber	Controller #1	Injector Power Supply - Bad Intelligent Device or Component
352	1079	4	Amber	5 Volts DC Supply	Sensor Supply Voltage #1 Circuit – Voltage Below Normal, or Shorted to Low Source
386	1079	3	Amber	5 Volts DC Supply	Sensor Supply Voltage #1 Circuit – Voltage Above Normal, or Shorted to High Source
387	1043	3	Amber	Internal Sensor Voltage Supply	Accelerator Pedal or Lever Position Sensor Supply Voltage Circuit - Voltage Above Normal, or Shorted to High Source
415	100	1	Red	Engine Oil Pressure	Oil Pressure Low – Data Valid but Below Normal Operational Range - Most Severe Level
418	97	15	Maint.	Water in Fuel Indicator	Water in Fuel Indicator High - Data Valid but Above Normal Operational Range – Least Severe Level
422	111	2	Amber	Coolant Level	Coolant Level - Data Erratic, Intermittent, or Incorrect
425	175	2	Amber	Oil Temperature	Engine Oil Temperature - Data Erratic, Intermittent, or Incorrect
428	97	3	Amber	Water in Fuel Indicator	Water in Fuel Sensor Circuit - Voltage Above Normal, or Shorted to High Source
429	97	4	Amber	Water in Fuel Indicator	Water in Fuel Sensor Circuit - Voltage Below Normal, or Shorted to Low Source
431	558	2	Amber	Accelerator Pedal Low Idle Switch	Accelerator Pedal or Lever Idle Validation Circuit - Data Erratic, Intermittent, or Incorrect
432	558	13	Red	Accelerator Pedal Low Idle Switch	Accelerator Pedal or Lever Idle Validation Circuit - Out of Calibration

Fault Code	J1939 SPN	J1939 FMI	Lamp Color	J1939 SPN Description	Cummins Description
433	102	2	Amber	Boost Pressure	Intake Manifold Pressure Sensor Circuit - Data Erratic, Intermittent, or Incorrect
434	627	2	Amber	Power Supply	Power Lost without Ignition Off - Data Erratic, Intermittent, or Incorrect
435	100	2	Amber	Engine Oil Pressure	Oil Pressure Sensor Circuit - Data Erratic, Intermittent, or Incorrect
441	168	18	Amber	Electrical Potential (Voltage)	Battery #1 Voltage Low - Data Valid but Below Normal Operational Range – Moderately Severe Level
442	168	16	Amber	Electrical Potential (Voltage)	Battery #1 Voltage High - Data Valid but Above Normal Operational Range – Moderately Severe Level
443	1043	4	Amber	Internal Sensor Voltage Supply	Accelerator Pedal or Lever Position Sensor Supply Voltage Circuit - Voltage Below Normal, or Shorted to Low Source
449	157	0	Red	Injector Metering Rail 1 Pressure	Fuel Pressure High - Data Valid but Above Normal Operational Range – Moderately Severe Level
451	157	3	Amber	Injector Metering Rail 1 Pressure	Injector Metering Rail #1 Pressure Sensor Circuit - Voltage Above Normal, or Shorted to High Source
452	157	4	Amber	Injector Metering Rail 1 Pressure	Injector Metering Rail #1 Pressure Sensor Circuit - Voltage Below Normal, or Shorted to Low Source
488	105	16	Amber	Intake Manifold	Intake Manifold 1 Temperature - Data Valid but Above Normal Operational Range - Moderately Severe Level
497	1377	2	Amber	Switch Circuit	Multiple Unit Synchronization Switch Circuit - Data Erratic, Intermittent, or Incorrect
523	611	2	Amber	System Diagnostic code # 1	OEM Intermediate (PTO) Speed switch Validation - Data Erratic, Intermittent, or Incorrect
527	702	3	Amber	Circuit - Voltage	Auxiliary Input/Output 2 Circuit - Voltage Above Normal, or Shorted to High Source
528	93	2	Amber	Switch - Data	Auxiliary Alternate Torque Validation Switch - Data Erratic, Intermittent, or Incorrect
529	703	3	Amber	Circuit - Voltage	Auxiliary Input/Output 3 Circuit - Voltage Above Normal, or Shorted to High Source
551	558	4	Amber	Accelerator Pedal Low Idle Switch	Accelerator Pedal or Lever Idle Validation Circuit - Voltage Below Normal, or Shorted to Low Source
553	157	16	Amber	Injector Metering Rail 1 Pressure	Injector Metering Rail #1 Pressure High – Data Valid but Above Normal Operational Range - Moderately Severe Level
554	157	2	Amber	Injector Metering Rail 1 Pressure	Fuel Pressure Sensor Error - Data Erratic, Intermittent, or Incorrect
559	157	18	Amber	Injector Metering Rail 1 Pressure	Injector Metering Rail #1 Pressure Low – Data Valid but Below Normal Operational Range - Moderately Severe Level
584	677	3	Amber	Starter Solenoid Lockout Relay Driver Circuit	Starter Relay Circuit - Voltage Above Normal, or Shorted to High Source
585	677	4	Amber	Starter Solenoid Lockout Relay Driver Circuit	Starter Relay Circuit - Voltage Below Normal, or Shorted to Low Source
595	103	16	Amber	Turbocharger 1 Speed	Turbocharger #1 Speed High - Data Valid but Above Normal Operational Range – Moderately Severe Level
596	167	16	Amber	Alternate Potential (voltage)	Electrical Charging System Voltage High – Data Valid but Above Normal Operational Range - Moderately Severe Level
597	167	18	Amber	Alternate Potential (voltage)	Electrical Charging System Voltage Low – Data Valid but Below Normal Operational Range - Moderately Severe Level
598	167	1	Red	Alternate Potential (voltage)	Electrical Charging System Voltage Low – Data Valid but Below Normal Operational Range - Most Severe Level
649	1378	31	Maint	Engine Oil Change Interval	Change Lubricating Oil and Filter – Condition Exists
687	103	18	Amber	Turbocharger 1 Speed	Turbocharger #1 Speed Low - Data Valid but Below Normal Operational Range – Moderately Severe Level

Fault Code	J1939 SPN	J1939 FMI	Lamp Color	J1939 SPN Description	Cummins Description
689	190	2	Amber	Engine Speed	Primary Engine Speed Sensor Error – Data Erratic, Intermittent, or Incorrect
691	1172	3	Amber	Turbocharger #1Compressor Inlet Temperature	Turbocharger #1 Compressor Inlet Temperature Sensor Circuit – Voltage Above Normal, or Shorted to High Source
692	1172	4	Amber	Turbocharger #1Compressor Inlet Temperature	Turbocharger #1 Compressor Inlet Temperature Sensor Circuit – Voltage Below Normal, or Shorted to Low Source
697	1136	3	Amber	Sensor Circuit - Voltage	ECM Internal Temperature Sensor Circuit - Voltage Above Normal, or Shorted to High Source
698	1136	4	Amber	Sensor Circuit - Voltage	ECM Internal Temperature Sensor Circuit - Voltage Below Normal, or Shorted to Low Source
719	22	3	Amber	Crankcase Pressure	Extended Crankcase Blow-by Pressure Circuit - Voltage Above Normal, or Shorted to High Source
729	22	4	Amber	Crankcase Pressure	Extended Crankcase Blow-by Pressure Circuit - Voltage Below Normal, or Shorted to Low Source
731	723	7	Amber	Engine Speed Sensor #2	Engine Speed/Position #2 mechanical misalignment between camshaft and crankshaft sensors - Mechanical System Not Responding Properly or Out of Adjustment
753	723	2	Amber	Engine Speed Sensor #2	Engine Speed/Position #2 Camshaft sync error - Data Erratic, Intermittent, or Incorrect
757	611	31	Amber	Electronic Control Module	Electronic Control Module data lost - Condition Exists
778	723	2	Amber	Engine Speed Sensor #2	Engine Speed Sensor (Camshaft) Error – Data Erratic, Intermittent, or Incorrect
779	703	11	Amber	Auxiliary Equipment Sensor Input	Warning Auxiliary Equipment Sensor Input # 3 (OEM Switch) - Root Cause Not Known
951	166	2	None	Cylinder Power	Cylinder Power Imbalance Between Cylinders - Data Erratic, Intermittent, or Incorrect
1117	627	2	None	Power Supply	Power Lost With Ignition On - Data Erratic, Intermittent, or Incorrect
1139	651	7	Amber	Injector Cylinder # 01	Injector Cylinder #1 - Mechanical System Not Responding Properly or Out of Adjustment
1141	652	7	Amber	Injector Cylinder # 02	Injector Cylinder #2 - Mechanical System Not Responding Properly or Out of Adjustment
1142	653	7	Amber	Injector Cylinder # 03	Injector Cylinder #3 - Mechanical System Not Responding Properly or Out of Adjustment
1143	654	7	Amber	Injector Cylinder # 04	Injector Cylinder #4 - Mechanical System Not Responding Properly or Out of Adjustment
1144	655	7	Amber	Injector Cylinder # 05	Injector Cylinder #5 - Mechanical System Not Responding Properly or Out of Adjustment
1145	656	7	Amber	Injector Cylinder # 06	Injector Cylinder #6 - Mechanical System Not Responding Properly or Out of Adjustment
1239	2623	3	Amber	Accelerator Pedal Position	Accelerator Pedal or Lever Position Sensor 2 Circuit - Voltage Above Normal, or Shorted to High Source
1241	2623	4	Amber	Accelerator Pedal Position	Accelerator Pedal or Lever Position Sensor 2 Circuit - Voltage Below Normal, or Shorted to Low Source
1242	91	2	Red	Accelerator Pedal Position	Accelerator Pedal or Lever Position Sensor 1 and 2 - Data Erratic, Intermittent, or Incorrect
1256	1563	2	Amber	Control Module Identification Input State	Control Module Identification Input State Error - Data Erratic, Intermittent, or Incorrect
1257	1563	2	Red	Control Module Identification Input State	Control Module Identification Input State Error - Data Erratic, Intermittent, or Incorrect
1911	157	0	Amber	Injector Metering Rail	Injector Metering Rail 1 Pressure - Data Valid but Above Normal Operational Range - Most Severe Level
2111	32	3	Amber	Coolant Temperature	Coolant Temperature 2 Sensor Circuit - Voltage Above Normal, or Shorted to High Source
2112	52	4	Amber	Coolant Temperature	Coolant Temperature 2 Sensor Circuit - Voltage Below Normal, or Shorted to Low Source
2113	52	16	Amber	Coolant Temperature	Coolant Temperature 2 - Data Valid but Above Normal Operational Range - Moderately Severe Level

Fault Code	J1939 SPN	J1939 FMI	Lamp Color	J1939 SPN Description	Cummins Description
2114	52	0	Red	Coolant Temperature	Coolant Temperature 2 - Data Valid but Above Normal Operational Range - Most Severe Level
2115	2981	3	Amber	Coolant Pressure	Coolant Pressure 2 Circuit - Voltage Above Normal, or Shorted to High Source
2116	2981	4	Amber	Coolant Pressure	Coolant Pressure 2 Circuit - Voltage Below Normal, or Shorted to Low Source
2117	2981	18	Amber	Coolant Pressure	Coolant Pressure 2 - Data Valid but Below Normal Operational Range - Moderately Severe Level
2185	611	3	Amber	System Diagnostic code # 1	Sensor Supply Voltage #4 Circuit – Voltage Above Normal, or Shorted to High Source
2186	611	4	Amber	System Diagnostic code # 1	Sensor Supply Voltage #4 Circuit – Voltage Below Normal, or Shorted to Low Source
2195	703	14	Red	Auxiliary Equipment Sensor	Auxiliary Equipment Sensor Input 3 Engine Protection Critical - Special Instructions
2215	94	18	Amber	Fuel Delivery Pressure	Fuel Pump Delivery Pressure - Data Valid but Below Normal Operational Range - Moderately Severe Level
2216	94	1	Amber	Fuel Delivery Pressure	Fuel Pump Delivery Pressure - Data Valid but Above Normal Operational Range – Moderately Severe Level
2217	630	31	Amber	Calibration Memory	ECM Program Memory (RAM) Corruption - Condition Exists
2249	157	1	Amber	Injector Metering Rail 1 Pressure	Injector Metering Rail 1 Pressure - Data Valid but Below Normal Operational Range - Most Severe Level
2265	1075	3	Amber	Electric Lift Pump for Engine Fuel	Fuel Priming Pump Control Signal Circuit – Voltage Above Normal, or Shorted to High Source
2266	1075	4	Amber	Electric Lift Pump for Engine Fuel	Fuel Priming Pump Control Signal Circuit – Voltage Below Normal, or Shorted to Low Source
2292	611	16	Amber	Fuel Inlet Meter Device	Fuel Inlet Meter Device - Data Valid but Above Normal Operational Range - Moderately Severe Level
2293	611	18	Amber	Fuel Inlet Meter Device	Fuel Inlet Meter Device flow demand lower than expected - Data Valid but Below Normal Operational Range - Moderately Severe Level
2311	633	31	Amber	Fuel Control Valve #1	Fueling Actuator #1 Circuit Error – Condition Exists
2321	190	2	None	Engine Speed	Engine Speed / Position Sensor #1 - Data Erratic, Intermittent, or Incorrect
2322	723	2	None	Engine Speed Sensor #2	Engine Speed / Position Sensor #2 - Data Erratic, Intermittent, or Incorrect
2345	103	10	Amber	Turbocharger 1 Speed	Turbocharger speed invalid rate of change detected - Abnormal Rate of Change
2346	2789	15	None	System Diagnostic Code #1	Turbocharger Turbine Inlet Temperature (Calculated) - Data Valid but Above Normal Operational Range – Least Severe Level
2347	2629	15	None	System Diagnostic Code #1	Turbocharger Compressor Outlet Temperature (Calculated) - Data Valid but Above Normal Operational Range – Least Severe Level
2362	1072	4	Amber	Engine Compression Brake Output # 1	Engine Brake Actuator Circuit #1 – Voltage Below Normal, or Shorted to Low Source
2363	1073	4	Amber	Engine Compression Brake Output # 2	Engine Brake Actuator Circuit #2 – Voltage Below Normal, or Shorted to Low Source
2366	1072	3	Amber	Engine Compression Brake Output # 1	Engine Brake Actuator Circuit #1 – Voltage Above Normal, or Shorted to High Source
2367	1073	3	Amber	Engine Compression Brake Output # 2	Engine Brake Actuator Circuit #2 – Voltage Above Normal, or Shorted to High Source
2377	647	3	Amber	Fan Clutch Output Device Driver	Fan Control Circuit - Voltage Above Normal, or Shorted to High Source
2384	641	4	Amber	Variable Geometry Turbocharger	VGT Actuator Driver Circuit - Voltage Below Normal, or Shorted to Low Source
2385	641	3	Amber	Variable Geometry Turbocharger	VGT Actuator Driver Circuit - Voltage Above Normal, or Shorted to High Source
2555	729	3	Amber	Inlet Air Heater Driver #1	Intake Air Heater #1 Circuit - Voltage Above Normal, or Shorted to High Source

MECALAC Baumaschinen GmbH

Am Friedrichsbrunnen 2
D-24782 Büdelsdorf

Tél : +49 (0)4331 351 325
Fax :+49 (0)4331 351 491

Email : info@mecalac.com
Web : www.mecalac.com