AHLMANN

OPERATING INSTRUCTIONS TELESCOPIC LOADERS

GB

AS 90tele

Ahlmann Baumaschinen GmbH Am Friedrichsbrunnen 2 D-24782 Büdelsdorf
Telefon +49 4331/351-325 Internet: www.ahlmann-baumaschinen.de
Telefax +49 4331/351404 E-Mail: info@ahlmann-baumaschinen.de

Introduction

Preface

Ahlmann's swivel shovel loaders, telescopic loaders, articulated loaders and front loaders are machines included in the vast product range of **Ahlmann's** Baumaschinen covering a wide variety of working tasks.

Decades of experience in the construction of earth-moving machines, the wide range of attachments available as well as modern production facilities, careful testing and highest quality demands guarantee the highest degree of reliability of your **Ahlmann** machine.

The extent of documentation delivered by the manufacturer includes the following:

- Loader operating instructions
- Engine operating instructions
- Loader spare parts list
- Engine spare parts list
- EC conformity declaration

Operating instructions

The operating instructions contain all the information which the user requires for operation and maintenance.

In the "Maintenance" section, all maintenance work and operation tests are described which can be carried out by trained personnel.

This section does not cover more extensive maintenance work that is reserved to personnel authorized and trained by the manufacturer. In particular, this applies to facilities governed by Motor Vehicle Construction and Use Regulations and the Regulations for the Prevention of Accidents.

Due to the construction modifications reserved by the manufacturer, there may be differences in the figures; however, this has no influence on the technical contents.

How to use this manual

Explanations

- The designations **"left"**and **"right"** are to be seen from the driver's seat in the driving direction.
- Option
  means: not fitted in series.

Information about illustrations

- (3-35)
  means: chapter 3, fig. 35
- (3-35/1)
  means: chapter 3, fig. 35, item 1
- (3-35/arrow)
  means: chapter 3, fig. 35, ←

Abbreviations used

UVV = Unfallverhütungsvorschrift (Accident Prevention Regulations)

StVZO = Straßenverkehrzulassungsordnung (German Traffic Regulations)

Edition: 09.2006

Table of Contents

1 Fundamental safety instruction

1.1 Warnings and symbols ..... 1 - 2
1.2 Proper use of the loader ..... 1 - 2
1.3 Organizational measures ..... 1 - 2
1.4 Selection of personnel and necessary qualifications ..... 1 - 3
1.5 Safety information for certain operating phases ..... 1 - 4
1.5.1 Normal operation ..... 1 - 4
1.5.2 Special work regarding the use of the machine and elimination of defects during work; disposal ..... 1 - 7
1.6 Instructions regarding special categories of danger ..... 1 - 9
1.6.1 Electrical energy ..... 1 - 9
1.6.2 Hydraulics ..... 1 - 10
1.6.3 Noise ..... 1 - 10
1.6.4 Oil, grease and other chemical substances ..... 1 - 11
1.6.5 Gas, dust, steam, smoke ..... 1 - 11
1.7 Transport and towing; recommissioning ..... 1 - 11
1.8 Safety information for the contractor or the contractor's authorized personnel ..... 1 - 12
1.8.1 Organizational measures ..... 1 - 12
1.8.2 Selection of personnel and necessary qualifications; basic responsibilities ..... 1 - 12

2 Signs

3 Protection against theft

3.1 Identifying features on the loader ..... 3 - 2
3.2 Parking the loader ..... 3 - 2
3.3 Drive-away interlocks ..... 3 - 3
3.3.1 Transponder for drive-away interlock ..... 3 - 3
3.3.2 Encodable drive-away interlock ..... 3 - 3

4 Description

4.1 Overview ..... 4 - 2
4.2 Loader ..... 4 - 3
4.2.1 Undercarriage ..... 4 - 3
4.2.2 Tyres ..... 4 - 3
4.2.3 Steering system ..... 4 - 3
4.2.4 Brake system ..... 4 - 4
4.2.5 Battery ..... 4 - 4
4.2.6 Fuel supply system ..... 4 - 4
4.2.7 Air filter device ..... 4 - 4
4.2.8 Lift, tip and telescoping devices ..... 4 - 4
4.2.9 Swivel unit and axle support ..... 4 - 5
4.2.10 Floating position ..... 4 - 5
4.2.11 Lifting device suspension ..... 4 - 5
4.2.12 Pipe break safety device ..... 4 - 5
4.2.13 Swivel restriction ..... 4 - 6
4.2.14 Load indicator ..... 4 - 6
4.2.15 Overload cut-off ..... 4 - 7
4.2.16 Equipment ..... 4 - 7
4.3 Wheel change ..... 4 - 8
4.4 Controls ..... 4 - 9
4.5 Instrument panel ..... 4 - 10

5 Operation

5.1 Checks before start-up ..... 5 - 2
5.2 Commissioning ..... 5 - 2
5.2.1 Start the diesel engine ..... 5 - 2
5.2.2 Winter operation ..... 5 - 3
5.2.2.1 Fuel ..... 5 - 3
5.2.2.2 Engine oil change ..... 5 - 3
5.2.2.3 Changing the oil in the hydraulic system ..... 5 - 3
5.2.2.5 Anti-freezing agent for the windshield washer system ..... 5 - 4
5.2.3 Driving the loader on public roads ..... 5 - 4
5.2.3.1 Carrying a bucket ..... 5 - 4
5.2.5 Working with the loader ..... 5 - 5
5.2.5 Heater and ventilation system ..... 5 - 7
5.2.5.1 Setting the air flow ..... 5 - 7
5.2.5.2 Switching on the heater ..... 5 - 7
5.3 Decommissioning the loader ..... 5 - 8
5.3.1 Parking the loader ..... 5 - 8
5.3.2 Switching off the diesel engine ..... 5 - 8
5.3.3 Switching off the heater and ventilation system ..... 5 - 8
5.3.5 Leaving the loader ..... 5 - 8
5.4 Adjusting the driver's seat ..... 5 - 9
5.4.1 Isri seat ..... 5 - 9
5.4.2 Grammer seat ..... 5 - 9
5.5 Switching the steering type ..... 5 - 11

6 Attachments

6.1 Mounting and dismounting attachments without hydraulic connections ..... 6 - 2
6.1.1 Standard/lightweight bucket ..... 6 - 2
6.1.2 Fork-lift attachment ..... 6 - 3
6.1.2.1 Picking up an elevated load ..... 6 - 3
6.1.3 Lifting hook ..... 6 - 4
6.2 Mounting and dismounting attachments with hydraulic connections ..... 6 - 4
6.2.1 Multi-purpose bucket ..... 6 - 4
6.3 Use of additional attachments ..... 6 - 6

7 Rescue, towing, lashing, lifting by crane

7.1 Rescue, towing, lashing ..... 7 - 2
7.1.1 Rescue/towing of the swivel shovel loader if the engine or drive has failed ..... 7 - 2
7.1.1.1 Towing the swivel shovel loader if the engine has failed ..... 7 - 2
7.1.1.2 Towing the loader if the drive has failed ..... 7 - 4
7.2 Lifting by crane ..... 7 - 5

8 Maintenance

8 Maintenance Plan ..... 8 - 1
8.1 Notes regarding maintenance ..... 8 - 2
8.2 Maintenance work ..... 8 - 3
8.2.1 Engine oil level check ..... 8 - 3
8.2.2 Oil level check for axles ..... 8 - 3
8.2.2.1 Rear axle » slow loader « ..... 8 - 3
8.2.2.2 Rear axle » fast loader « ..... 8 - 3
8.2.2.3 Planetary gear ..... 8 - 4
8.2.2.4 Front axle ..... 8 - 4
8.2.3 Oil level check in the hydraulic oil reservoir ..... 8 - 5
8.2.4 Oil change, engine ..... 8 - 5
8.2.5 Oil change, axles ..... 8 - 5
8.2.5.1 Rear axle » slow loader « ..... 8 - 5
8.2.5.2 Rear axle » fast loader « ..... 8 - 6

8.2.5.3 Planetary gear ..... 8 - 7
8.2.5.4 Front axle ..... 8 - 7
8.2.6 Oil change, hydraulic system ..... 8 - 8
8.2.7 Changing the hydraulic oil filter cartridges ..... 8 - 9
8.2.8 Maintaining/replacing the air filter ..... 8 - 9
8.2.9 Replacing the safety cartridge ..... 8 - 10
8.2.10 Replacing the fuel filter ..... 8 - 11
8.2.11 Replacing the starter battery ..... 8 - 11
8.2.12 Maintaining/replacing the fresh air filter ..... 8 - 11
8.2.13 Checking/adjusting the parking brake play ..... 8 - 12
8.3 Grease/oil lubrication points ..... 8 - 13
8.3.1 Rear axle pivot bolts ..... 8 - 13
8.3.2 Rear axle ..... 8 - 13
8.3.3 Front axle ..... 8 - 13
8.3.4 Ball bearing ring ..... 8 - 14
8.3.5 Wear liners on the telescope arm ..... 8 - 14
8.3.6 Telescope arm ..... 8 - 14
8.3.7 Driver's cabin door ..... 8 - 18
8.3.8 Multi-purpose bucket ..... 8 - 18
8.3.9 Oil lubrication points ..... 8 - 19
8.3.9.1 Parking brake ..... 8 - 19
8.3.9.2 Supporting valve actuator ..... 8 - 19

9 Faults, causes and remedies

10 Wiring diagrams

10.1 Electric wiring diagram ..... 10 - 1
10.2 Hydraulic circuit diagram ..... 10 - 4

11 Technical data (loader)

11.1 Loader ..... 11 - 2
11.2 Engine ..... 11 - 2
11.3 Starter ..... 11 - 2
11.4 Alternator ..... 11 - 2
11.5 Hydrostatic drive motor ..... 11 - 2
11.6 Axle loads ..... 11 - 3
11.7 Tyres ..... 11 - 3
11.8 Steering system ..... 11 - 3
11.9 Brake system ..... 11 - 3
11.10 Electrical system ..... 11 - 3
11.11 Hydraulic system ..... 11 - 3
11.11.1 Swivel unit ..... 11 - 4
11.11.2 Support system ..... 11 - 4
11.12 Fuel supply system ..... 11 - 4
11.13 Heater and ventilation system ..... 11 - 4
11.14 Full flow suction filter ..... 11 - 4
11.15 Electric contamination indicator ..... 11 - 4
11.16 Oil cooler with temperature-controlled fan ..... 11 - 4
11.17 Noise emission ..... 11 - 4

12 Technical data (attachments)

12.1 Buckets ..... 12 - 2
12.2 Fork-lift attachment ..... 12 - 3
12.3 Lifting hook ..... 12 - 4

13 Additional options, modifications, notes on inspection for loaders

13.1 Additional options ..... 13 - 2
13.2 Modifications ..... 13 - 2

Safety regulations

1 Fundamental safety instructions

1.1 Warnings and symbols

In this operation manual, the following designations or symbols are used for important information.

NOTE

Extra information about the economical use of the loader.

CAUTION

Special information for regulations and prohibitions for avoiding damage.

DANGER

Information or regulations and prohibitions for prevention of damage to persons or extensive damage to goods.

1.2 Proper use of the loader

1.2.1 This machine was designed according to the state of the art and recognised safety rules. Nevertheless, use of the machine may cause danger for the user or third parties or impairments to the machine or other objects.

1.2.2 The machine and manufacturer-approved attachments may only be used in a technical non-objectionable condition, taking all safety regulations into account, especially with regard to the operating manuals (machine and engine). In particular, defects which could have a detrimental effect on the safety of the machine should be eliminated immediately.

1.2.3 The machine is designed exclusively for the purposes described in this operating manual. Any other use beyond these purposes is regarded as being improper use. The manufacturer is not liable for any damage caused in this connection. The risk is solely that of the user.

Authorised use of the machine also requires that the operating manual (machine and engine) be heeded and the inspection and maintenance conditions are complied with.

1.3 Organizational measures

1.3.1 The operating manual (machine and engine) must be available at all times and at the site where the machine is in operating condition.

1.3.2 In addition to the operating manuals (machine and engine), the general applicable and other binding regulations for the prevention of accidents (especially the safety regulations of the German Trade Association - VBG 40) as well as the regulations for environmental protection must be observed; personnel must be instructed accordingly.
Also heed all regulations governing public traffic.

1.3.3 The personnel who are to work with the machine must read the operating manuals (machine and engine) before starting work, especially the chapter concerning safety precautions.
This also applies to personnel working occasionally with the machine, e.g. during maintenance work.

1.3.4 The driver must wear a seat belt during operation.

1.3.5 Personnel working with the machine must not wear long flowing hair, loose clothing or jewellery, including rings. Danger of injuries, e.g. by getting caught or being pulled in.

1.3.6 All safety and danger plates on the machine must be observed!

1.3.7 All safety and danger plates must be attached to the machine and must be kept legible.

1.3.8 In case of modifications to the machine, especially in case of damage or changes in the operating behaviour of the machine which could influence its safety, stop the machine immediately and inform the responsible person in charge about the incident.

1.3.9 Do not make any modifications or conversions to the machine which could affect safety without the manufacturer's consent. This also applies to the installation and adjustment of safety devices, valves and welding of supporting parts.

1.3.10 Check the hydraulic system, especially hydraulic pipes, at regular intervals for defects and immediately eliminate any defects found.

1.3.11 The inspection periods specified in the operating manual (machine and engine) and the maintenance plan must be observed.

1.4 Selection of personnel and necessary qualifications

Basic responsibilities

1.4.1 The machine may be driven and maintained only by personnel selected by the employer for this purpose.

These persons must:
- have attained the age of 18 years,
- be physically and intellectually suitable,
- have been instructed in the operation or maintenance of the machine and must have demonstrated their ability to their employer,
- must be expected to carry out the work conveyed to them in a diligent manner.

1.4.2 Electrical work on the machine may be carried out only by a qualified electrician or persons supervised by a qualified electrician according to the electrical regulations.

1.4.3 Only qualified specialists may carry out work on the chassis, the brake and steering system.

1.4.4 Only personnel with special experience and the necessary know-how are permitted to carry out work on the hydraulic system.

1.5 Safety information for certain operating phases

1.5.1 Normal operation

1.5.1.1 Always fasten seat belts prior to starting the machine.

1.5.1.2 A passenger may only be transported if an appropriate seat is available (option)!

1.5.1.3 Start and drive the machine from the driver's seat only!

1.5.1.4 Observe the control lamps according to the operation manual (machine and engine) during starting and switching-off operation!

1.5.1.5 Before commencing work / driving, make sure that the brakes, steering, signal beacons and lights function!

1.5.1.6 Before moving the machine, always check that the attachments are safely stowed so that no accident may occur!

1.5.1.7 Before commencing work, make yourself familiar with the working environment. This means observing obstacles on the working site, quality and resistance of the soil ground, undertaking the necessary protection precautions between the building site and the public traffic.

1.5.1.8 Before starting the machine, make sure that no person is endangered by the moving machine!

1.5.1.9 Take measures so that the machine can be operated **only** in a safe and functional manner. The machine may only be operated when all safety devices, e.g. detachable safety devices and sound absorption, exist and function.

1.5.1.10 Avoid any action which appears to be dangerous!

1.5.1.11 Persons must not be carried in the working equipment, e.g. in the attachments!

1.5.1.12 The operator may carry out work with the machine only if no persons are in the danger zone.

The danger zone is the area near the machine where persons may be injured

- by work-induced movements of the machine,
- by work attachments and devices,
- by loads swinging out,
- by dropping loads,
- by attachments falling from the machine.

1.5.1.13 In case of danger to persons, the operator must give appropriate warning signs. It may be necessary to stop work.

1.5.1.14 In case of functional defects, stop the machine immediately and secure it. Eliminate defects immediately!

1.5.1.15 Check the machine at least once every shift for external visible damage and defects. Report any defects (including changes in the operational behavior) immediately to the person in charge. If necessary stop the machine immediately and safeguard it.

1.5.1.16 The driver may slew the attachments in overhead driving, operating and working areas only if these areas are suitably safeguarded by protective roofing. These protection roofs must offer appropriate safety against loads and falling goods. If you are in doubt, assume **no** protection roofs are present.

1.5.1.17 When driving, the attachment is to be kept as close to the ground as possible.

1.5.1.18 Driving with the **extended** telescope is permitted in exceptional cases only, and even then with extreme care, drastically reduced speed and careful braking only.

1.5.1.19 Please observe the applicable traffic regulations when driving on public roads, paths or open spaces. The machine must be brought into road-worthy condition beforehand.

1.5.1.20 Make sure to always switch on lights in poor visibility and during darkness.

1.5.1.21 If the lights of the machine are not adequate for the safe execution of certain work, additional lighting must be provided on the working site, especially at dumping points.

1.5.1.22 Should the driver's sight of his driving and working area be restricted due to work-induced influences, he must be given guidance or he must safeguard the working area by a firm barrier.

1.5.1.23 Only reliable persons may act as guides. They must be informed of their duties prior to commencing work.

1.5.1.24 The driver and guide must agree on signals for communication. These signals may only be given by the driver and guide.

1.5.1.25 The guide must be easily recognizable – e.g. by wearing warning clothing – and must always be in the driver's field of vision.

1.5.1.26 When passing under subways, bridges, tunnels, electrical overhead lines, etc., make sure that there is adequate clearance!

1.5.1.27 Maintain adequate clearance when working at the edge of quarries, pits, rubbish dumps and embankments to eliminate any danger of the machine plunging down. The contractor or his deputy must stipulate the distance from the edge, taking the soil bearing capacity into consideration.

1.5.1.28 The machine may only be used at stationary dumping areas when firmly integrated installations are provided to prevent the machine from running or sliding down.

1.5.1.29 Avoid such work which could have a detrimental effect on the stability of the machine.
The following may affect the stability:
- overloading,
- ground that is too soft,
- abrupt acceleration or deceleration of driving or working movement,
- reversing out of a high driving speed,
- working on slopes,
- driving too quickly round sharp bends,
- driving the machine on rough terrain when the bucket arm is swivelled.

1.5.1.30 Do not traverse across slopes. Always carry working equipment and loads near the ground, especially when driving down slopes. Sudden cornering is forbidden!

1.5.1.31 On steep inclines and gradients, the load is to be carried on the uphill side.

1.5.1.32 Reduce speed before inclines; always adapt the speed of the machine to the local conditions!
Never change into low gear when driving on slopes, but rather before the slope!

1.5.1.33 When leaving the machine, always safeguard the machine to prevent it from unintentionally rolling away; prevent non-authorised persons from using it!

1.5.1.34 The driver must not leave the machine if the attachments are not lowered or safeguarded.

1.5.1.35 During breaks and after work hours, the driver must park the machine on solid and, if possible, level ground and safeguard it against unintentionally rolling away.

1.5.2 Special work regarding the use of the machine and elimination of defects during work; disposal

1.5.2.1 The dates for adjustment work, maintenance work and inspections laid down in the operating manual (machine and engine) must be strictly observed. This also applies to information regarding the replacement of parts/ part equipment. This work may only be executed by skilled personnel.

1.5.2.2 For all work involving the operation, conversion or adjustment of the machine and its safety devices as well as inspection, maintenance and repair work, please observe the switch-on and switch-off procedures in accordance with the operating manual (machine and engine) as well as the related instructions for maintenance work.

1.5.2.3 The engine must be switched off before maintenance or repair work is carried out.

1.5.2.4 The stability of the machine or the attachments must be guaranteed at all times during maintenance and repair work.

1.5.2.5 Maintenance and repair work may only be carried out when the attachment is set down on the ground or supported or when equivalent measures against unintentional movement were taken.
During maintenance and repair work under the telescope arm:
- the telescope arm must be mechanically supported, e.g. insert the bucket arm support (option) (1-1/arrow).
- secure the hand lever for the working and auxiliary hydraulics (1-2/arrow).
- the swivel unit must be blocked. To do this, remove the blocking wedge (1-3/arrow) from the holder, insert it into the swivel block (1-4/arrow) and secure it with the spring locking lever.

1.5.2.6 If necessary, secure the maintenance area on a large scale.

1.5.2.7 The machine must be protected from unintentionally starting after it has been switched off for maintenance and repair work:
- remove the ignition key and
- attach a warning sign to the main battery switch.

This applies especially to works on the electrical equipment.

1.5.2.8 Individual pieces and large assemblies must be carefully secured to hoisting equipment when being replaced to avoid any damage. Only suitable and technically sound hoisting equipment may be used as well as crane equipment with adequate payload. Do not stand or work underneath suspended loads!

Figure 1-1

Figure 1-2

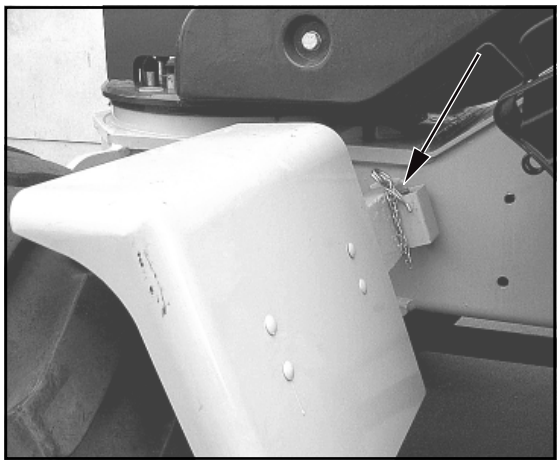
Figure 1-3

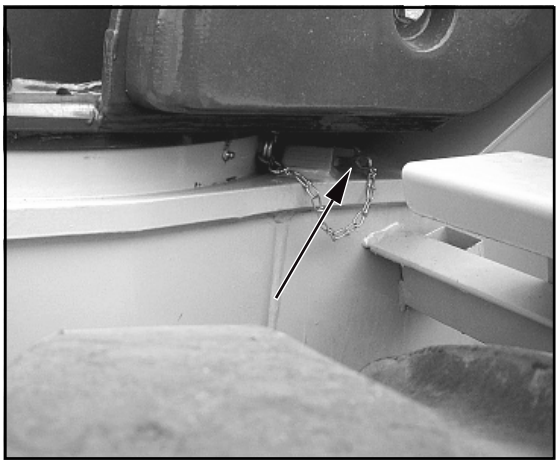

Figure 1-4

1.5.2.9 Only experienced personnel should be entrusted with the securing of loads! Loads must be secured so that they cannot slip or fall down.

1.5.2.10 Attached loads may only be moved with the machine when the road is graded.

1.5.2.11 When working with hoisting equipment / elevators the slingers may only work with the approval of the driver and from the side of the boom. The driver may only give his consent if the machine is standing still and the working attachment is not being moved.

1.5.2.12 Persons assisting with the guidance of loads and slingers may only stay in visual or communication reach of the driver.

1.5.2.13 The operator must move the load as close to the ground as possible and avoid swivelling the load.

1.5.2.14 The operator may not move the load over the heads of persons.

1.5.2.15 In the case of erection work that must be carried out above normal human height, suitable safety ascent devices and working platforms must be used. Do not use engine parts, especially attachments such as buckets, as climbing and descending facilities. Use safety harnesses when working at very great heights. All handles, steps, railings, platforms, scaffolds, and ladders must be kept free from dirt and ice.

1.5.2.16 Clean the machine, especially connections and screw connections, before commencement of maintenance work and make sure that the machine is free from oil, fuel oil or dirt. Do not use aggressive detergents. Use lintless cleaning rags!

1.5.2.17 Before cleaning the machine with water or steam jet (high pressure cleaning unit) or with detergent, protect all areas where water/steam/detergent may penetrate and affect the functions or safety of the machine by a suitable cover or by applying tape. In particular, engine components such as the injection pump, generator, generator governor and starter are very delicate.

1.5.2.18 After cleaning, completely remove all protective covering and tape.

1.5.2.19 After cleaning, check all fuel, engine oil and hydraulic oil pipelines for leakages, loose connections, abraded parts and damage. Eliminate defects immediately!

1.5.2.20 Always fasten screw connections after completion of maintenance and repair work.

1.5.2.21 Should it be necessary to dismantle safety devices during mounting, maintenance or repair work, these safety devices must be re-installed and checked carefully after completed maintenance and repair work.

1.5.2.22 Make sure that fuel, accessory material and interchanged parts are safely disposed of with no danger to the environment.

1.5.2.23 The machine should be checked by a specialist before commissioning and after essential modifications before it returns to service.

1.5.2.24 The machine must be checked by a specialist once a year. Furthermore, a specialist must check the machine whenever necessary according to operating conditions.

1.5.2.25 The test results must be recorded and kept in the archives at least until the following inspection date.

1.6 Instructions regarding special categories of danger

1.6.1 Electrical energy

1.6.1.1 Only use original fuses with stipulated ratings. Immediately switch off the machine if the electrical supply fails.

1.6.1.2 When working near overhead lines and overhead wires, a safety clearance must be kept between the machine and its working equipment in order to prevent sparking over. The safety clearance depends on the nominal voltage of the overhead/wire line. This also applies to the distance between the lines and to the attachments and slung loads.

The following safety clearance must be observed to meet the above mentioned requirement:

Nominal voltage			Safety clearance
(kilovolts)			(meters)
	to	1 kV	1.0 m
above 1 kV	up to	110 kV	3.0 m
above 110 kV	up to	220 kV	4.0 m
above 220 kV	up to	380 kV	5.0 m
unknown nominal voltage			5.0 m

When approaching overhead lines, all working movements of the machine must be taken into consideration, e.g. the position of jibs, the swinging of ropes and the dimensions of attached loads.

In addition, attention must be paid to any roughness of soil which could cause an inclined position of the machine, thus getting it closer to the overhead line.

The fact that overhead lines may swing out during windy weather and may reduce the distance must also be taken into consideration.

1.6.1.3 In the case of sparking over, the driver must bring the machine out of the danger area by lifting or lowering the attachments or by swivelling away or driving the machine out of the danger area. If this is not possible then the following rules must be observed:
- Do not leave the driver's cabin!
- Warn persons standing near the machine not to approach or touch the machine!
- Give immediate instructions to have the power cut off!
- Leave the machine only when it is sure that the electricity in the damaged / contacted power line is switched off so that the line is dead!

1.6.1.4 Work on the electrical system or on the operating system may only be carried out by a skilled electrician or by personnel instructed or supervised by such a trained electrician according to electrotechnical regulations.

1.6.1.5 The electrical installation of a machine must be reviewed/inspected at regular intervals. Any defects, e.g. loose connections or scorched cabling, must be eliminated immediately.

1.6.1.6 The main battery switch must be disconnected before inspection, maintenance or repair of machine parts and components so that they are not under power.

1.6.1.7 Electric welding operations may only be performed if the main battery switch has been removed.

1.6.2 Hydraulics

1.6.2.1 Only experts with special expertise and experience may carry out work on the hydraulic system!

1.6.2.2 All pipelines, hoses and screw connections must be checked regularly for leakages and visible damage! Immediately repair such defects! Spurting hydraulic oil may cause injuries and fire.

1.6.2.3 Those hydraulic system segments which are to be opened must be depressurised before commencement of the repair work according to the assembly group description!

1.6.2.4 The hydraulic pipelines must be correctly laid and connected! Do not mix up the connections. Spare parts must meet the technical requirements of the manufacturer. Original spare parts ensure the fulfilment of these requirements.

1.6.2.5 The factory settings of hydraulic components (e.g. the maximum permissible speed of the axial piston engine) must not be altered. Any adjustment will render the warranty invalid.

1.6.3 Noise

Sound protection equipment must be in the protective position during operation of the machine.

1.6.4 Oil, grease and other chemical substances

1.6.4.1 The relevant safety regulations must be observed when handling oil, grease or other chemical substances.

1.6.4.2 Caution when working with hot fuel and other accessory materials (danger of burning and scalding).

1.6.4.3 Caution when working with brake fluid and battery acid.

TOXIC AND CAUSTIC!

1.6.4.4 Be careful when working with fuel.

FIRE HAZARD!

- Before refuelling, switch off the engine and remove the ignition key.
- Do not refuel in an enclosed area.
- Never refuel near open fires or sparks.
- Do not smoke during refuelling.
- Immediately wipe up spilled fuel.
- Keep the machine free of fuel, oil and grease.

1.6.5 Gas, dust, steam, smoke

1.6.5.1 The machine may be operated in closed rooms only if sufficient ventilation is ensured! Ensure sufficient ventilation prior to starting the machine!
The regulations for the respective working site must be strictly observed.

1.6.5.2 Carry out welding, burning and grinding work on the machine only when this is explicitly approved. Otherwise, there is the danger of fire and explosion!

1.6.5.3 Before carrying out welding, burning and grinding work, clean the machine and its vicinity of combustibles and make sure that the room is adequately ventilated.

Explosion hazard!

1.7 Transport and towing; recommissioning

1.7.1 The machine may only be towed if the brakes and steering function.

1.7.2 Towing may be carried out only by means of an adequately dimensioned towing bar in connection with towing devices.

1.7.3 Start towing at a low speed. Persons must not be near the towing bar.

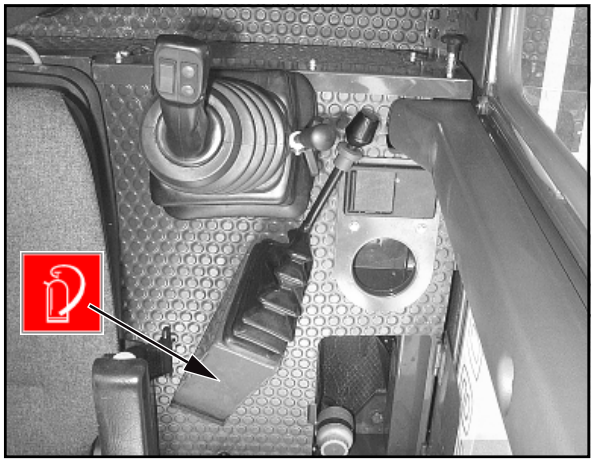

Figure 1-5

1.7.4 When the machine is loaded and transported, the necessary auxiliary equipment must be fitted to prevent any unintended movement. The tyres must be kept clean of mud, snow and ice so that the machine can drive on ramps without danger of sliding.

1.7.5 Strictly observe the operating manual during recommissioning.

1.8 Safety information for the contractor or the contractor's authorized personnel

1.8.1 Organizational measures

1.8.1.1 We emphasise that attachments that are not supplied by us are also not tested and approved by us. Use of such products can under certain conditions adversely affect the present constructional qualities of your loader and thus limit the active and passive driving safety. The manufacturer cannot be held responsible for damage that occurs through the use of such products.

1.8.1.2 Inform yourself of the location/use of fire extinguishers (1-5/arrow) and first-aid kit (on the maintenance plate behind the driver's seat)!

1.8.1.3 When travelling on public roads, a first-aid kit, a warning triangle and a warning lamp must be available on the vehicle.

1.8.2 Selection of personnel and necessary qualifications; basic responsibilities

1.8.2.1 Only reliable persons are allowed to work on/ with the machine. The minimum legal age must be observed.

1.8.2.2 Employ trained or instructed personnel only. Clearly define the competencies of the personnel regarding operation, installation, maintenance and repair work.
Ensure that only authorised personnel may work on/with the machine!

1.8.2.3 Authorize the drive to refuse instructions given by third parties when these instructions are detrimental to the safety of the driver and the machine.

1.8.2.4 Personnel who are to be trained, instructed or working on/with the machine in the scope of professional training must not work on/with the machine unless they are supervised by an experienced person who has been authorised by the employer.

Signs

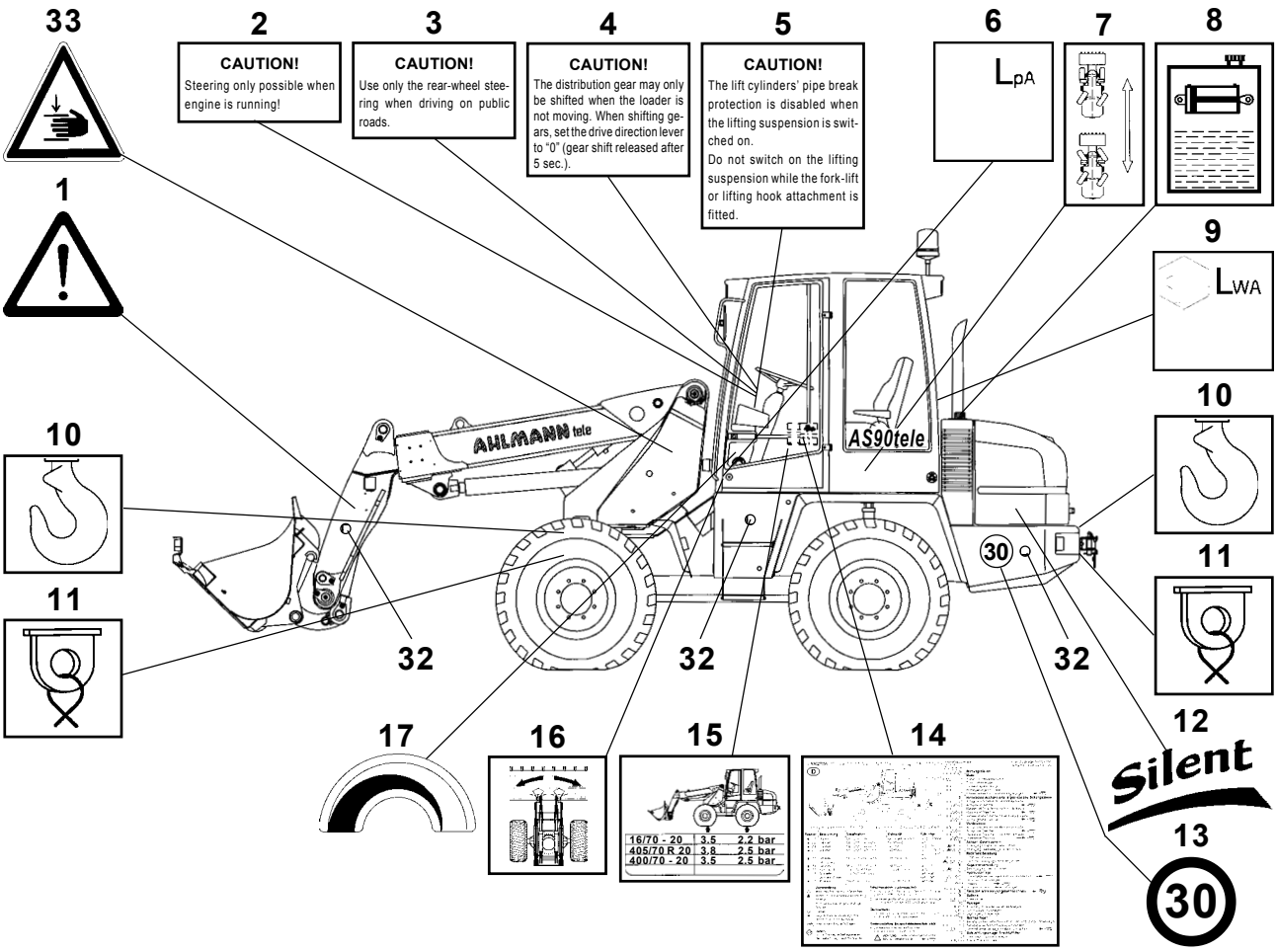
33
2
CAUTION!
Steering only possible when engine is running!
3
CAUTION!
Use only the rear-wheel steering when driving on public roads.
4
CAUTION!
The distribution gear may only be shifted when the loader is not moving. When shifting gears, set the drive direction lever to "0" (gear shift released after 5 sec.).
5
CAUTION!
The lift cylinders' pipe break protection is disabled when the lifting suspension is switched on.
Do not switch on the lifting suspension while the fork-lift or lifting hook attachment is fitted.
6
LpA
7
8
1
9
LWA
10
10
11
11
AHLMANN tele
AS90tele
30
32
32
32
12
Silent
13
30
17
16
15
14
16/70 - 20 3.5 2.2 bar
405/70 R 20 3.8 2.5 bar
400/70 - 20 3.5 2.5 bar

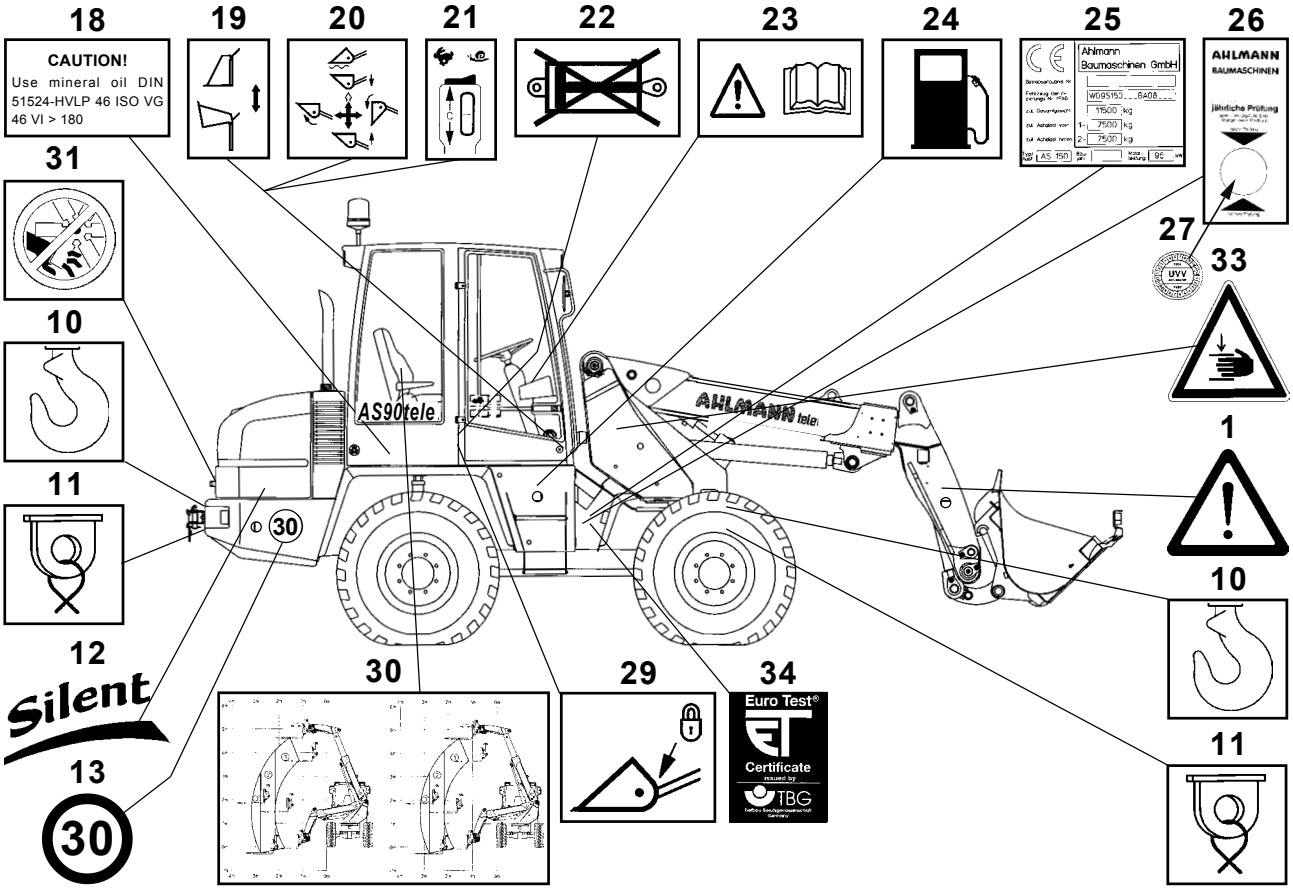
18
CAUTION!
Use mineral oil DIN 51524-HVLP 46 ISO VG 46 VI > 180
19
20
21
22
23
24
25
26
AHLMANN
BAUMASCHINEN
jährliche Prüfung
Ahlmann Baumaschinen GmbH
31
10
11
12
Silent
13
30
AS90tele
AHLMANN tele
30
27
33
1
10
11
30
29
34
Euro Test®
Certificate
TBG

1	Symbol:	Stay out of the danger zone
2	Sign:	**CAUTION!** - Steering only possible when engine is running!
3	Sign:	**CAUTION!** -Use only rear-wheel steering when driving on public roads.
4	Sign:	**» Only for fast loaders - 30 km/h «** **CAUTION!** The distribution gear may only be shifted when the loader is not moving. When shifting gears, set the drive direction lever to “0” (gear shift released after 5 sec.).
5	Sign:	**» Only for loaders with pipe break protection «** **CAUTION!** The lift cylinders’ pipe break protection is disabled when the lifting suspension is switched on. Do not switch on the lifting suspension while the fork-lift or lifting hook attachment is fitted.
6	Sign:	Acoustic power level (sect. 11.17)
7	Symbol:	Steering type switching (4-9/2) rear-wheel/four-wheel steering
8	Symbol:	Hydraulic oil tank
9	Sign:	Sound power level (sect. 11.17)
10	Symbol:	Lifting points for transportation by crane
11	Symbol:	Fixing eyes for towing and lashing
12	Sign:	Lettering “Low-noise construction machine”
13	Sign:	Maximum speed
14	Sign:	Maintenance schedule
15	Sign:	Tyre pressure
16	Symbol:	Swivelling
17	Symbol:	Heater
18	Sign:	Use mineral oil DIN 51524-HVLP 46 ISO VG 46 VI > 180 (to the right next to the driver’s seat on the maintenance flap)
19	Symbol:	Hand lever for auxiliary hydraulics (4-10/2) - Quick-change device - Hand lever forward - lock - Hand lever to the rear - unlock - Multi-purpose bucket - Hand lever forward - close - Hand lever to the rear - open
20	Symbol:	Hand lever for working hydraulics (4-10/9) - Telescope arm - Hand lever forward - lower - Hand lever to the rear - raise - Hand lever forward beyond its pressure point - Floating position - Quick-change device - Hand lever to the left - tilt up - Hand lever to the right - dump - Bucket / fork-lift attachment / load hook - Hand lever to the left - tilt up - Hand lever to the right - dump
21	Symbol:	Hydraulic drive stages (4-10/13) Hare symbol - fast Snail symbol - slow Drive direction - forward - 0 - reverse
22	Symbol:	Ball block valve for working/auxiliary hydraulics closed
23	Symbol:	Read and observe the operating instructions before commissioning. Make sure that all other users have read the safety instructions!
24	Symbol:	Fuel tank
25	Machine type label (includes the identification number of the vehicle)	
26	Sign:	Annual inspection as per UVV
27	Sign:	UVV badge
28	Omitted	
29	Symbol:	Quick-change device locked
30	Sign:	Fork-lift attachment load diagram
31	Symbol:	Open only when the engine is not running
32	Lateral reflector	on both sides of the machine
33	Symbol:	Beware of hand injuries
34	Euro Test	Certificate

Protection against theft

Figure 3-1

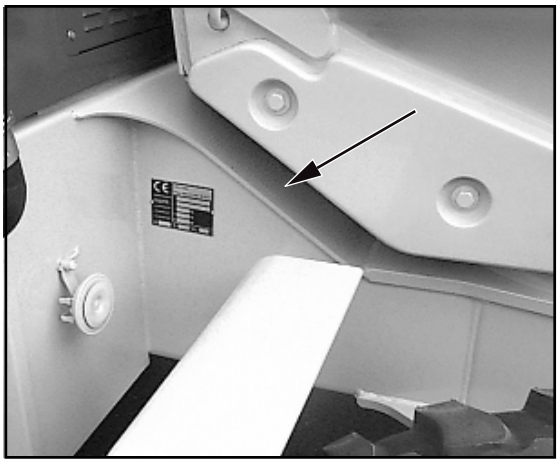

Figure 3-2

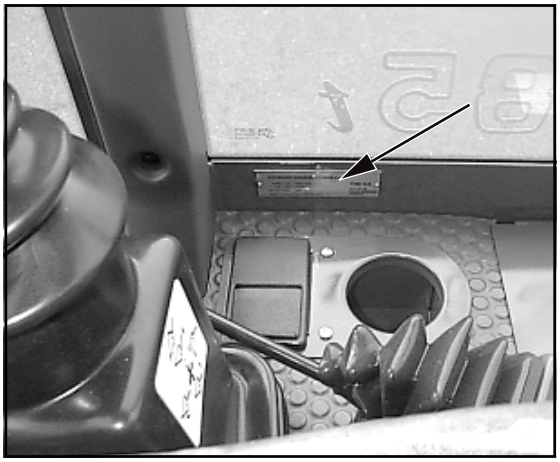

Figure 3-3

3 Protection against theft

Instances where construction machines were stolen have considerably increased in recent years.
To make it possible for the police, customs and other authorities to find and identify machines much faster, **Ahlmann** construction machines are fitted with the following identifying features:

3.1 Identifying features on the loader

(1) Loader type plate (3-1/arrow). Among other details, the loader type plate also gives the 17-digit **FIN** number (truck identification number) starting with W09.
(2) The **FIN** number is also stamped into the front part (3-2/arrow) of the loader.
(3) ROPS plate (3-3/arrow).
This plate gives the name of the manufacturer as well as details on the ROPS type, the loader type and the permissible overall weight.

3.2 Parking the loader

(1) Turn the steering wheel fully to the left or the right.
(2) Apply the parking brake (4-10/4).
(3) Tip the quick-change device until

- the tines of the bucket,
- the tines of the fork-lift attachment or
- the boom of the lifting hook, etc.

is placed on the ground.

(4) Close the ball block valve for the working and auxiliary hydraulics (1-2/arrow).
(5) Set the drive switch (4-10/12) to „forward“ or „reverse“.
(6) Set hydraulic drive stage „I“ (4-10/13).
(7) Set transmission stage „I“ (4-11/13) »only for fast loaders«.
(8) Remove the ignition key.
(9) Remove the main battery switch (4-10/7).
(10) Switch on the working lights (4-11/1). *
(11) Switch on the warning beacon (opt.) (4-11/11). *
(12) Switch on the hazard flasher (4-11/10). *
(13) Push the steering column switch (4-8/6) to the „High beam“ position. *
(14) Lock both doors.
(15) Lock the engine hood.
(16) Lock the tank lid.

* In case of short-circuiting, persons in the vicinity should be made aware of the unusually lit machine.

3.3 Drive-away interlocks

3.3.1 Transponder for drive-away interlock

(option)
The „transponder for drive-away interlock“ is an electronic drive-away interlock that deactivates vital loader functions.
If the transponder (e.g. a tag at the ignition key) is taken away from the receiver unit (in the immediate vicinity of the ignition lock), these vital functions are interrupted.

Advantages in case of an insured event:

The transponder for drive-away interlock meets the new, stricter requirements of the insurance companies.
Ask your insurance company for the appropriate details.

3.3.2 Encodable drive-away interlock

(option)
The „encodable drive-away interlock“ is an electronic drive-away interlock that deactivates vital loader functions.
A digital code lock releasing these loader functions is activated when the correct code has been entered.
This code number can be changed as often as desired.

Advantages in case of an insured event:

Ask your insurance company for appropriate details!

Description

4 Description

4.1 Overview

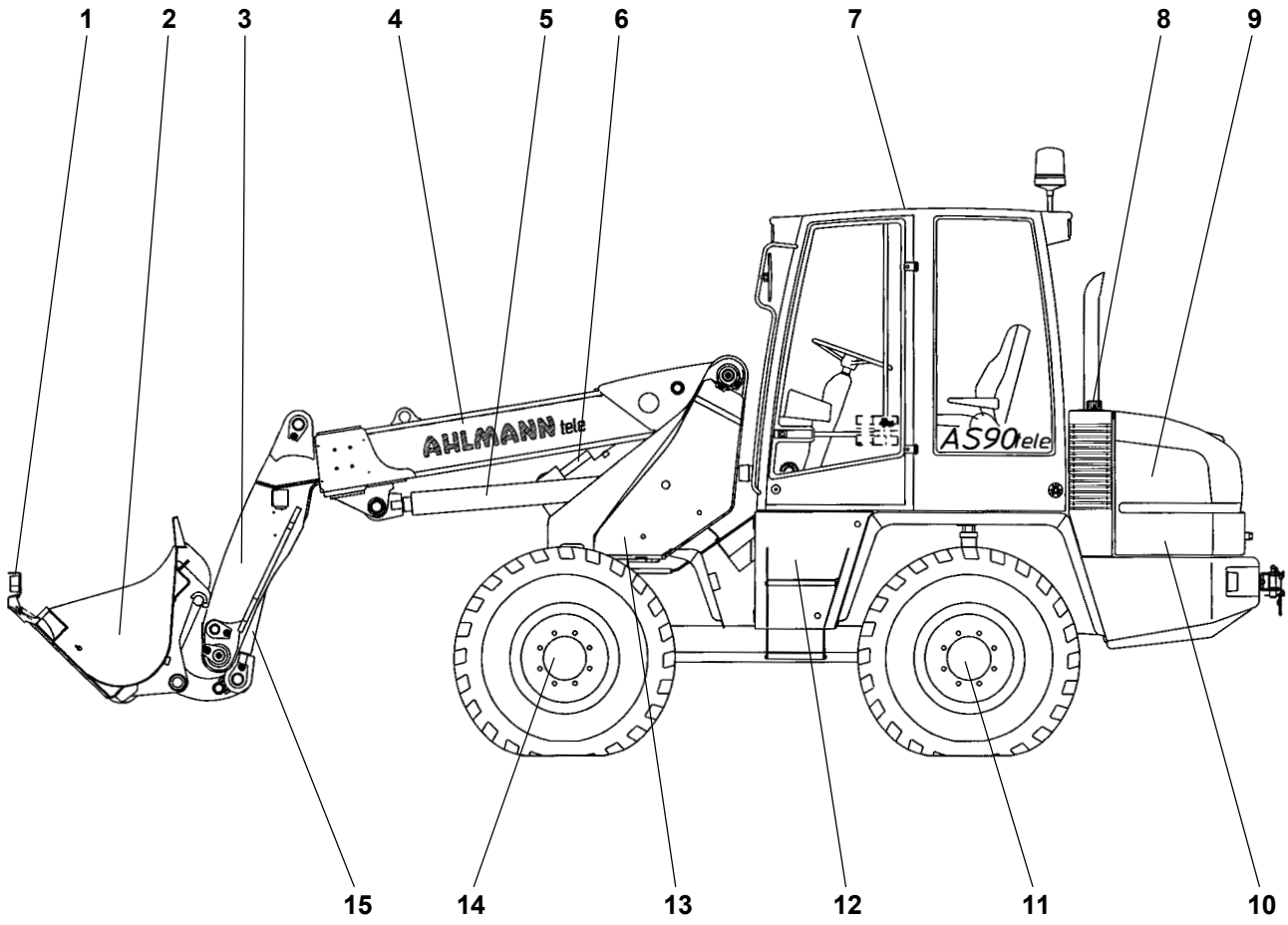

Figure 4-1

1 - Bucket protection
2 - Bucket/attachment
3 - Telescope head
4 - Telescope arm
5 - Lift cylinder
6 - Compensation cylinder
7 - Driver’s cab
8 - Hydraulic oil reservoir / filler neck
9 - Drive motor
10 - Battery compartment (right loader side)
11 - Rear axle
12 - Tool box
13 - Revolving seat
14 - Front axle
15 - Tip cylinder
16 - Fuel tank, steps at right loader side (not shown)

4.2 Loader

4.2.1 Undercarriage

The axial piston pump for the hydraulic drive is driven by the diesel engine. Pressure hoses for extremely high pressure connect the axial piston pump with the axial piston engine. The axial piston motor is flanged to the axle distribution gear. The torque of the axial piston engine is transmitted by the cardan shaft to the front and rear axles, both with planetary gears.

CAUTION

The maximum speed of the axial piston engine is governed by settings made at the factory. Any adjustment will render the warranty invalid.

The front axle is equipped with a self-locking differential (locking value 45%).

The series rear axle comes without self-locking differential. A self-locking differential (locking value 45%) is special equipment.

4.2.2 Tyres

The following tyres are permitted:

16/70 - 20
400/70 - 20
405/70 R 20

All four tyres are of equal size. For the running direction, if applicable, see Fig. 4-2.

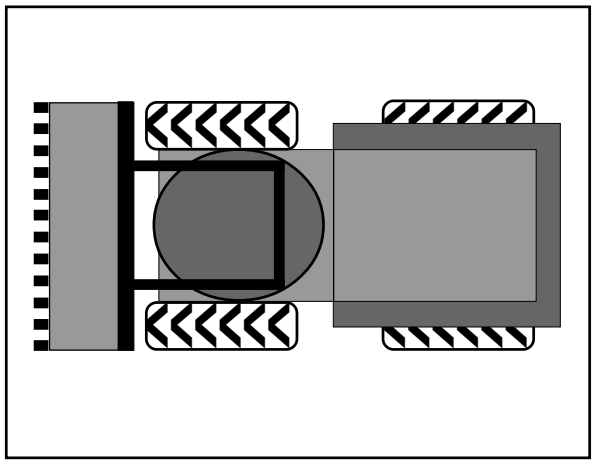

Figure 4-2

4.2.3 Steering system

The power for the hydrostatic steering system is supplied via a priority valve from a gear-type pump. With a minimum of effort on the steering wheel, the oil flow is directed by a steering unit into the steering cylinder.
Four-wheel and rear-wheel steering can be selected by way of a toggle valve.

Emergency steering

The hydrostatic steering system can also be used in a limited way if the diesel engine fails. The loader can be steered using a considerable amount of manual effort.

NOTE

See chapter 7, “Towing the loader”.

4.2.4 Brake system

Service brake/ inching

The service brake is operated via a double pedal (4-8/3). It is a fully hydraulic wet lamella brake in the front axle. When stepping on the pedal, an inching leverage releases the drive pump pilot pressure into the tank and then builds up the hydraulic pressure in the main brake cylinder. The hydrostatic drive consequently supports the service brake. As a rule, the accelerator is used for accelerating and decelerating during operation. The continuously adjustable inching function is required if a high lifting speed (high diesel engine speed) is required at low driving speeds (inching).

Parking brake

The loader features a manually operated parking brake. The parking brake is operated with a hand lever (4-10/4) located to the right of the driver's seat that acts on the wet lamella brake in the front axle via a Bowden cable. The control lamp (4-11/27) lights up when the parking brake is applied, and the drive motor is electrically switched off.

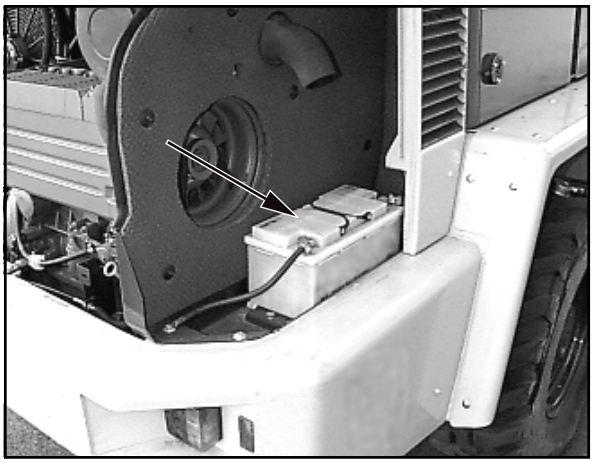

Figure 4-3

4.2.5 Battery

The battery compartment contains a maintenance-free battery (4-3/arrow) according to DIN with an increased cold start performance. The battery is to be kept clean and dry. Lightly grease the terminals with acid-free and acid-resistant grease.

CAUTION

Electric welding operations may only be performed if the battery main switch (4-10/7) has been pulled out.

4.2.6 Fuel supply system

The fuel tank is located on the right frame side bar. An electrical fuel gauge (4-11/7) in the operator's cabin monitors the fuel level in the tank. The filler neck (4-4/ arrow) is located on the right side in the cabin access area.

Figure 4-4

4.2.7 Air filter device

Dry air filter device with safety cartridge and dust discharge valve.

4.2.8 Lift, tip and telescoping devices

Via a servo valve a double-acting gear-type pump drives
- one lift cylinder
- one tip cylinder
- a telescope cylinder (a compensation cylinder)

All movements of the telescope arm, the telescope, the bucket, the attachments and the quick-change device are controlled from the operator's seat by pilot valves. These pilot valves provide continuous speed control from "slow" to "fast".

4.2.9 Swivel unit and axle support

Two single-acting swivel cylinders are fed by a separate gear-type pump via a servo valve. The revolving seat is connected to the cylinders by a chain drive and is thus completely free of play. Swivelling can be carried out simultaneously with lifting of the bucket arm without mutual interference.

The telescope arm's swivelling radius is 90° to the right or to the left.
If the telescope arm is swivelled more than approx. 30°, the axle support system is automatically activated. The load-side support cylinder that affects the rear axle is subjected to hydraulic pressure by the force of the load via the support valve, counteracting the swivelled load.

NOTE

The axle support is deactivated when swivelling back.

4.2.10 Floating position

The loader is equipped with a floating position function that allows work such as levelling (grading) on uneven ground to be performed. It is activated by moving the hand lever for working hydraulics (4-10/9) beyond its pressure point to the frontmost position. The hand lever remains in this position until it is pulled back.

DANGER

The floating position may only be activated when the telescope arm is in the lowermost position.

4.2.11 Lifting device suspension

(option)
When the loader must be driven over larger distances, especially with a loaded bucket, the lifting device suspension (4-11/15) should be activated to avoid resonant motion. This becomes even more important with increasing unevenness of the terrain and increasing speed of the loader.

4.2.12 Pipe break safety device

(option)
A pipe break safety valve is installed underneath each lift and tip cylinder. In the event of a pipe or hose break in the lift and/or tip system, the movements of the telescope arm and the tipping rod are blocked until the damage is repaired.

4.2.13 Swivel restriction

(option)
The loader is equipped with a swivel restriction that prevents swivelling by more than 30° to the left and right while the telescope is extended. This swivel restriction can be enabled or disabled with a toggle switch in the dashboard (4-11/14).

1. **With swivel restriction enabled:**
   - Swivelling by 90° to the left and right is possible while the telescope is retracted.
     - When the telescope arm is swivelled by more than 30° to the left or right, the telescope can be extended only if the swivel restriction is disabled.
   - Swivelling by 30° to the left and right is possible while the telescope is extended.
2. **With swivel restriction disabled:**
   - Swivelling by 90° to the left and right is possible for all telescope positions.
   - When the telescope is extended and the telescope arm is swivelled by more than 30° to the left or right and the swivel restriction is enabled in this position, only safe working movements are possible.
     - Retract telescope and
     - swivel to a straight forward position.

DANGER
Disable the swivel restriction for light levelling work only.

4.2.14 Load indicator

(option)
The load indicator (4-5) continuously informs the driver of the current load state of the telescope loader.

Function check:

When turned on, the unit automatically performs a self test.
Correct function: All LEDs light up briefly, and a continuous beep is heard.

CAUTION
The loader must not be operated until the load indicator is fully operable if errors are found during the function check.

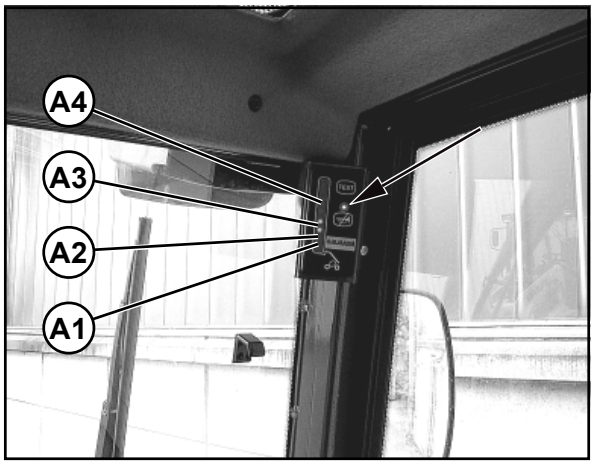

Figure 4-5

Visual/acoustic load indicator

- **4 green LEDs (4-5/A1)**
  The telescope loader operates safely.
- **2 yellow LEDs (4-5/A2)**
  The telescope loader is near its maximum permissible capacity.
- **1 red LED (4-5/A2)**
  The telescope loader has reached its maximum permissible capacity. At the same time, a warning beep is heard (can be disabled: 4-5/arrow). The warning beep is enabled only when the unit is turned off and on again.

- **1 red LED (4-5/A4)**
  The telescope loader has exceeded its maximum permissible capacity. At the same time, a warning beep is heard (can be disabled: 4-5/arrow). The warning beep is enabled only when the unit is turned off and on again. To perform safe hydraulic movements only: retract telescope and move swivel unit to a straight forward position.

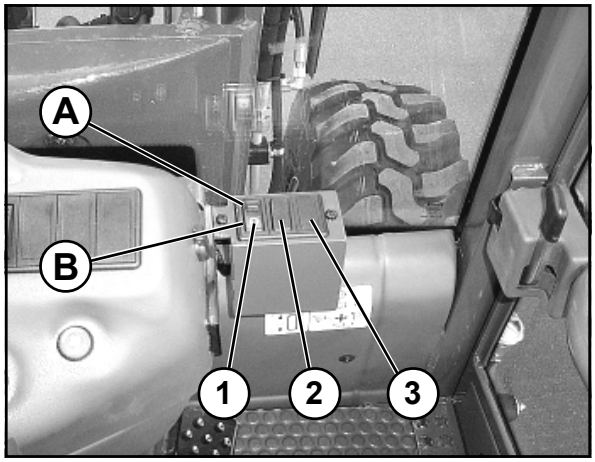

Figure 4-6

4.2.15 Overload cut-off

(option)
Use the switch (4-6/1) to enable or disable the overload cut-off.

- Switch to position **"B"**
  Overload cut-off is disabled. Only the visual/acoustic load indicator is in operation and indicates the load state.
- Switch to position **"A"**
  Overload cut-off is enabled. When LED **» A4 «** is lit, the working hydraulics is automatically cut-off (except for during retracting).
  The telescope loader can be returned to the safe range by retracting the telescope cylinder (4-10/10); the working hydraulics is then fully operable again.

NOTE

- The swivel restriction (4-11/14) can be disabled while the overload cut-off is enabled.
- With the swivel restriction disabled, swivelling is possible by 90° to the left and to the right, and the telescope can be retracted and extended in any swivel position.

NOTE

Controls (toggle switches/pushbuttons) in Fig. 4-6:
Item 1 Overload cut-off (option)
Item 2 Dump interlock (option)
Item 3 free

4.2.16 Equipment

Driver's cabin

Standard ROPS design with ECC conformity certificate. Comfortable entry and exit from both sides, good all-round vision, lockable doors, sun visor, front and rear windshield wipers/washers, rear window heater, multi-speed heating/ventilation system and fresh air filter.
A protection against dropping objects (FOPS) is available as option.

Driver's seat

The driver's seat has a hydraulic suspension and is provided with weight compensation. Horizontal and seat height positioning as well as for backrest and seat inclination permit optimum individual adaptation. The seat belt, the fold-up arm rests and the ergonomically formed seat and back rest assure a safe and comfortable seat position.

Figure 4-7

4.3 Wheel change

(1) Park the loader on a hard surface.
(2) Set the drive switch (4-10/12) to “0”.
(3) Apply the parking brake (4-10/4).

(4) When changing a wheel on the front axle:
- Lift and mechanically prop up the telescope arm [e.g. by inserting the telescope arm support (option) (1-1/arrow)] and lower the telescope arm until it rests on the telescope arm support.
- Block the swivel unit. To do this, remove the blocking wedge (1-3/arrow) from the holder, insert it into the swivel block (1-4/arrow) and secure it with the spring locking lever.

(4) When changing a wheel on the rear axle:
Lower the attachment to the ground.

(5) Turn the ignition key (4-11/19) to the left to position “0”.
(6) Secure the hand lever for the working and auxiliary hydraulics (1-2/arrow).
(7) Ensure that the loader does not roll away by securing it on one of the wheels of the axis in both driving directions. The wheel that does **not** have to be changed is to be secured.
(8) Loosen the wheel nuts of the wheel to be changed so that they can be turned manually.
(9) Fit a suitable jack (minimum capacity 3.0 tons) from the side under the axle bridge in the vicinity of the axle fixture so that it is centred and cannot slip (4-7). Lift the front/rear axle until the wheel does not have any contact to the ground.

DANGER
- Secure the jack by a suitable support to prevent it from sinking into the ground.
- Make sure that the jack is fitted correctly.

(10) Loosen the wheel nuts completely and remove them.
(11) Lower the loader slightly with the jack until the wheel bolts are free.
(12) Push the wheel from the wheel hub by moving it back and forth. Remove the wheel and roll it aside.
(13) Mount the new wheel onto the planetary axle.

NOTE
- Pay attention to the profile position.
- If the profile position of the spare tyre does not fit, the spare tyre may only be used temporarily until a suitable tyre can be fitted.

(14) Tighten the wheel nuts by hand.
(15) Lower the front/rear axle using the jack.
(16) Tighten the wheel nuts to 500 Nm with a torque wrench.

CAUTION
Retighten the wheel nuts after the first 8-10 operating hours.

4.4 Controls

1 - Lock lever for steering column adjustment
  - to the front/rear
  - in axial steering column direction
2 - Accelerator
3 - Double pedal for service brake/ inching
4 - Swivelling pedal
5 - Spirit level
6 - Steering column switch
  - to the front: Turn signal, right
  - to the rear: Turn signal, left
  - up - Low beam
  - down - High beam
  - pushbutton - Signal horn

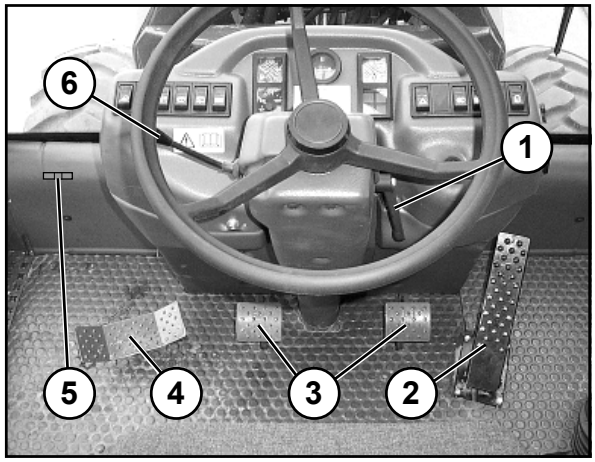

Figure 4-8

To the left of the driver's seat:

1 - Door handle
2 - Switching lever for steering
3 - Water tank for windshield washer system
4 - Maintenance door

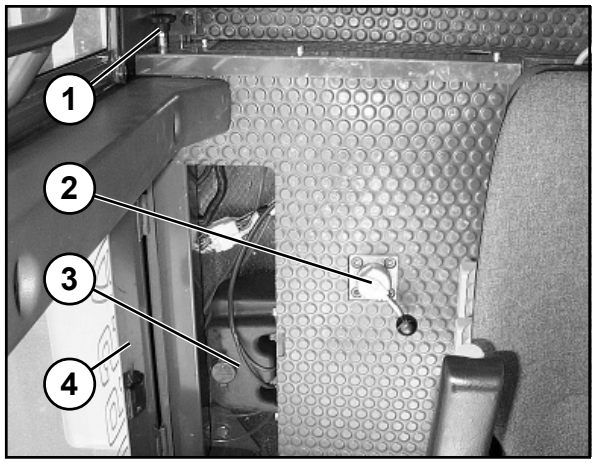

Figure 4-9

To the right of the driver's seat:

1 - Door handle
2 - Pilot valve for auxiliary hydraulics
3 - Handwheel for console adjustment
4 - Hand lever for parking brake
5 - Holder
6 - Maintenance door
7 - Battery main switch
8 - Compensation tank for brake fluid
9 - Pilot valve for working hydraulics
10 - Actuator for telescope cylinder
  - Retract telescope
11 - Actuator for telescope cylinder
  - Extend telescope
12 - Drive switch:
  forward/0/reverse
13 - Hydraulic drive stages:
  - right - Stage I: slow
  - left - Stage II: fast

Figure 4-10

4.5 Instrument panel

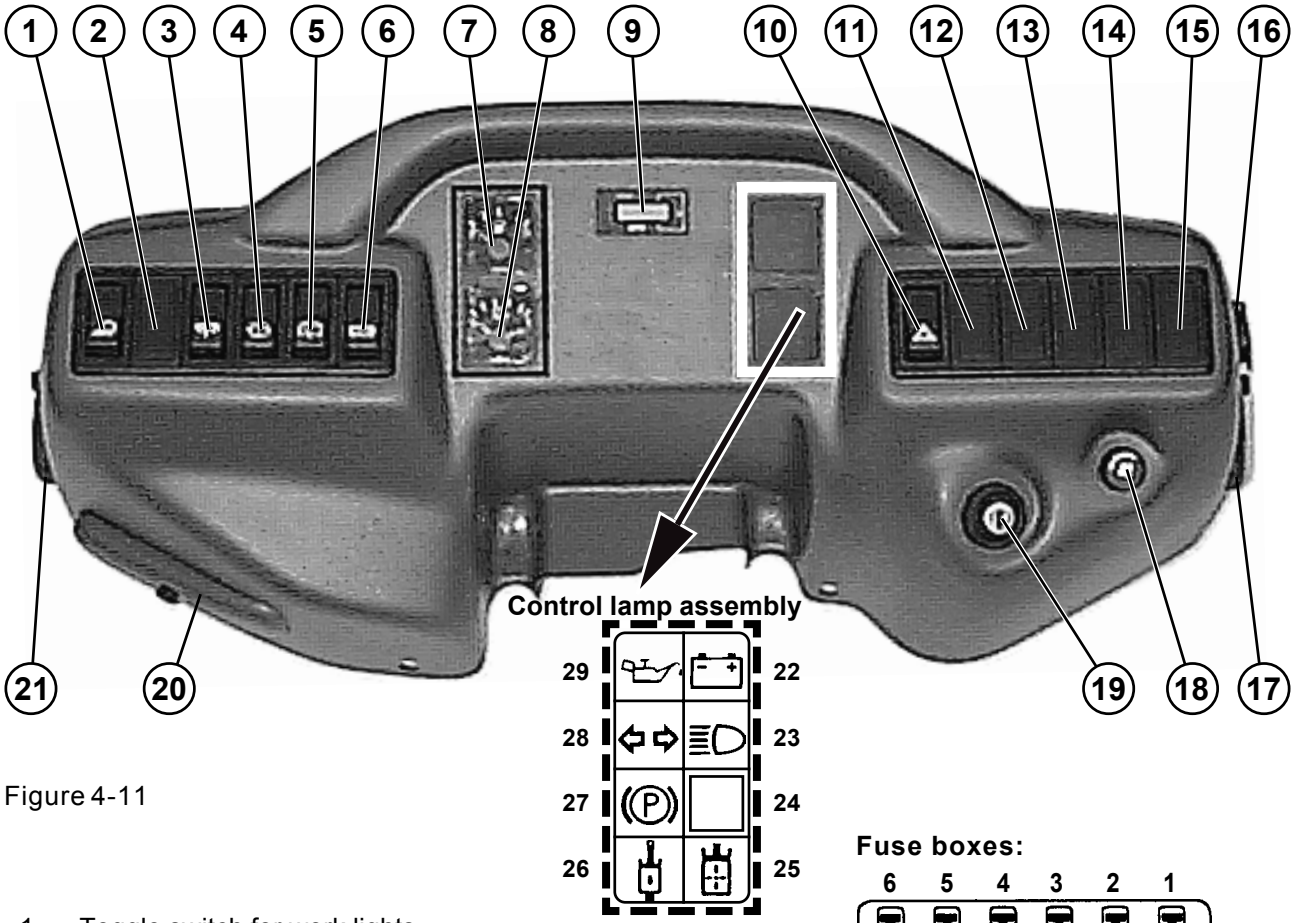

Figure 4-11

1 - Toggle switch for work lights
2 - Pushbutton for releasing the quick-change device
3 - Toggle switch for front interval wiper
4 - Toggle switch for front washer
5 - Toggle switch for rear wiper/washer
6 - Toggle switch for rear window heater
7 - Fuel gauge
8 - Engine oil temperature gauge
9 - Operating hours meter
10 - Toggle switch for hazard flasher system
11 - Toggle switch for warning beacon (option)
12 - Toggle switch for driving lights
13 - Gear shift pushbutton (only for fast loaders - 30 km/h)
14 - Toggle switch for swivel restriction release
15 - Toggle switch for lifting device suspension (option)
16 - Socket
17 - Fuse box (FC)
18 - Rotary switch for heater/ventilation system
19 - Starter switch
20 - Fuse box (FB)
21 - Fuse box (FA)
22 - Battery charge indicator lamp
23 - Control lamp for high beam
24 - free
25 - Hydraulic oil filter clogging indicator
26 - Control lamp for hydraulic oil temperature
27 - Control lamp for parking brake
28 - Control lamp for directional indicator
29 - Control lamp for engine oil pressure

option = Optional equipment

Fuse boxes:

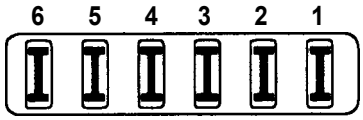

Fuse box (item 17)

1	Traction drive	7.5 A
2	Hydraulics	20.0 A
3	Rear window heater	30.0 A
4	Fan, blower	20.0 A
5	Windshield wiper/washer	20.0 A
6	Engine shut-off	5.0 A

Fuse box (item 20)

1	Tail light, left, Parking light, left	5.0 A
2	Tail light, right, Parking light, right	5.0 A
3	High beam	15.0 A
4	Low beam	15.0 A
5	Telescope function	15.0 A
6	Instrument lighting	5.0 A

Fuse box (item 21)

1	Brake lights	5.0 A
2	Turn indicator	7.5 A
3	Hazard flasher	15.0 A
4	Warning beacon (opt.), radio (opt.), interior lighting	10.0 A
5	Plug socket, signal horn	20.0 A
6	Working lights	20.0 A

opt. = optional equipment

Operation

5 Operation

5.1 Checks before start-up

- Engine oil level (see the operating instructions for the engine)
- Brake fluid level
- Hydraulic oil level
- Tyre pressure
- Profile depth
- Battery fluid level
- Lighting system
- Seat position
- Enable the swivel restriction. For this purpose, the toggle switch (4-11/14) top must be pushed and the switch locked.
  » only if work is to be commenced **«**
- Swivel unit safeguard (1-4/arrow); remove if necessary
  » only if work is to be commenced **«**
- Remove telescope arm prop [(e.g. bucket arm support (option) (1-2/arrow)] if necessary
- Open ball block valve for working and auxiliary hydraulics if necessary **»** only if work is about to begin **«**
- General state of the loader, e.g. check for leaks
- The presence of
  - a fist aid kit
  - a warning triangle
  - a signal lamp
  must be verified.

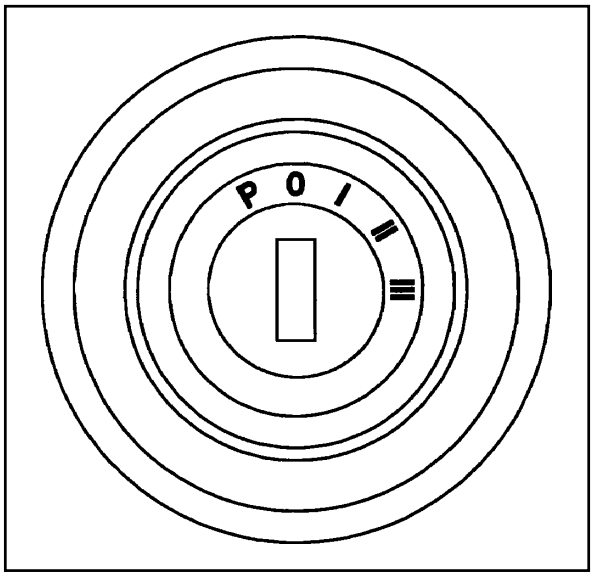

Figure 5-1

5.2 Commissioning

5.2.1 Start the diesel engine

(1) Fasten the safety belt (5-8/2).
(2) Engage the parking brake lever (4-10/4).
(3) Set the drive switch (4-10/12) to “0” (starter interlock!).
(4) Insert the ignition key into the starter switch (4-11/19) and turn the key clockwise to position “I“ (5-1).

NOTE

- The indicator lamps for battery charge, parking brake and engine oil pressure light up. The fuel level and coolant temperature instruments deflect.
- Start the engine in the neutral position.

(5) Turn the ignition key clockwise to position “III“. As soon as the engine starts, release the ignition key.

NOTE

- If the engine has not started after two attempts, determine the cause using the malfunction table in the operating instructions for the engine (section 7.1).
- For operation at extremely low temperatures, see the operating instructions for the engine.
- The clogging indicator (4-11/25) may light up prematurely after a cold start. It will go out when the hydraulic oil warms up. Operate the loader at a **low** speed until the indicator lamp (4-11/25) goes out. Never subject the loader to full loads in this state.

5.2.2 Winter operation

CAUTION

If the outside temperature is below 0 °C, the loader must be properly “warmed up“ to avoid damage to certain assemblies. To do so, actuate all cylinders (lifting, tipping and swivelling and telescope cylinders) for some time (depending on the ambient temperature) with the machine idling.

Proper operation of the machine, even for subzero temperatures, can only be guaranteed if the following measures have been taken:

5.2.2.1 Fuel

At low temperatures, paraffin precipitating from the fuel can cause the fuel system to clog up. For this reason, always use winter diesel fuel (suitable for temperatures down to -15 °C) when the outside temperature is below 0 °C.

NOTE

The fuelling stations normally start offering winter diesel fuel in good time before the cold season starts. Often, they offer diesel fuel that can be used down to temperatures of 20 °C (super-grade diesel fuel).
If the temperature is below -15 °C or -20 °C, paraffin oil must be added to the diesel fuel. For the mixture ratio, refer to the diagram (5-2).

I = Summer diesel fuel
II = Winter diesel fuel
III = Super-grade diesel fuel

CAUTION

Only mix the ingredients in the tank! First, fill in the required amount of paraffin oil, then top up with diesel fuel.

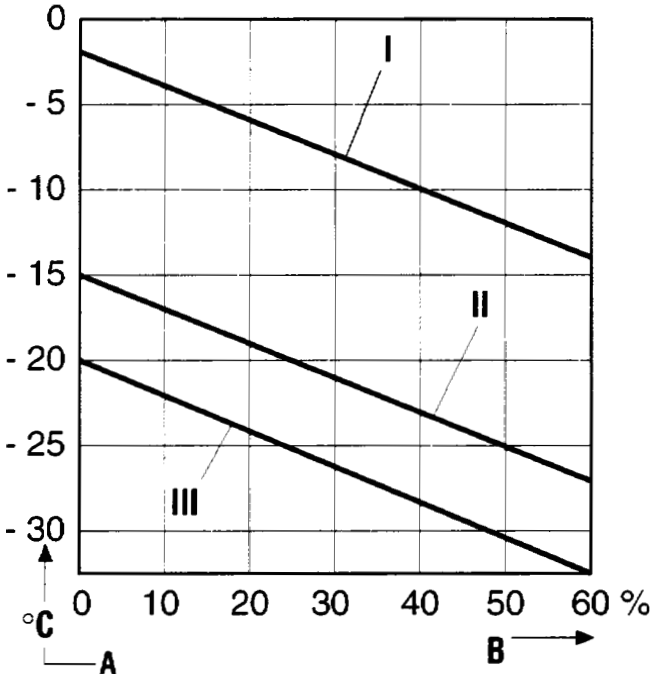

Figure 5-2

5.2.2.2 Engine oil change

See the operating instructions for the engine and the operating instructions for the machine (section 8.2.4).

5.2.2.3 Changing the oil in the hydraulic system

CAUTION

The viscosity of the hydraulic oil changes according to the temperature; therefore, the ambient temperature in the location where the machine will be used determines what viscosity class (SAE class) must be chosen. If the hydraulic oil used matches the expected ambient temperature, optimum operating conditions can be attained. Therefore, use higher grade hydraulic oil if required.
See section 8.2.6 for the oil change procedure required for the hydraulic system.

5.2.2.4 Anti-freezing agent for the windshield washer system

CAUTION

If the temperature is expected to drop below 0° C, add a sufficient amount of anti-freezing agent to the water in the windshield washer system (4-9/3) to prevent it from icing up. Heed the instructions provided by the manufacturer for the mixture ratio.

5.2.3 Driving the loader on public roads

CAUTION

- Driving on public roads is **only** permitted with an empty standard, multi-purpose or lightweight bucket and **only with** bucket protection.
- The telescope must be fully retracted.
- Driving on public roads with a filled bucket is forbidden.
- When the road lights (which are used solely to light up the road) are switched on, the highest permissible speed is 30 km/h.
- The working searchlights must be switched off (4-11/1).
- According to § 52 (4) Nr. 1 of the German Motor Vehicle Construction and Use Regulations, the warning beacon (optional equipment) may be switched on only if the loader is marked by red and white warning stripes.
- The distribution gear drive stages must only be switched at standstill, and only when the drive direction lever (4-10/12) is in the “0“ position (applies to fast loaders only).

The driver of the loader must possess an appropriate, valid driver’s license.
- Class V old for slow loaders
  » 20 km/h variant «
- Class III for fast loaders
  » 30 km/h and 35 km/h variants «

The driver must carry his driver’s license (original) and the operating permit (original) with him.
Before driving on public roads, the following road safety measures must be taken:

5.2.3.1 Carrying a bucket

(1) Lower the telescope arm until the lowest point of the telescope arm or the bucket is at least 30 cm above the road (5-3).

(2) Close the ball block valve for the working and auxiliary hydraulics (1-2/arrow).

CAUTION

When closed, the ball block valve hand lever is perpendicular to the flow direction. This prevents the bucket arm from being lowered and the bucket from tipping while driving.

(3) Block the swivel unit by inserting the blocking wedge (1-3/arrow) into the swivel block (1-4/arrow) and secure it with the spring locking lever.

(4) Cover the bucket cutting edge and teeth with the bucket protector (5-3/arrow).

(5) Insert the plug of the bucket protector into the socket (5-4/arrow, option).

(6) Perform a function check.

(7) Lock both doors.

(8) Switch the switching lever for the steering to the “rear-wheel steering“ position (4-9/2).

(9) Release the parking brake (4-10/4).

(10) Choose gear step II (4-11/13) - only for the fast loader.

CAUTION

The distribution gear drive stages must only be switched at standstill, and only when the drive direction lever (4-10/12) is in the “0“ position.

(11) Preselect hydraulic drive stage II (4-10/13).

(12) Select the travel direction (4-10/12).

(13) Press the accelerator pedal (4-8/2).

NOTE

The loader starts. The travel speed is determined by the position of the accelerator pedal.

CAUTION

- The service brake is activated by depressing the brake pedal (4-8/3).
- Changing the travel direction during driving is **not** allowed to avoid any danger to other road users.

Figure 5-3

Figure 5-4

5.2.4 Working with the loader

Normally, all work is executed in hydraulic drive stage II (4-10/13) and a gear stage that matches the working conditions (4-11/13) (applies to fast loaders only).

CAUTION

The distribution gear drive stages must only be switched at standstill, and only when the drive direction lever (4-10/12) is in the “0“ position (applies to fast loaders only).

For special tasks which ask for a more sensitive control of the speed or a higher engine speed at reduced travel speed, hydraulic drive stage “I“ (4-10/13) can be selected. The travel speed can thus be reduced to 6 km/h.

To attain full performance, the combined action of propulsion and working hydraulics is necessary. It is up to the operator to control the available power using the accelerator, the inching function and the hand lever for the working hydraulics.

NOTE

The hydraulic drive stage can be switched from I to II or vice versa while driving. However, switching from drive stage II to I is not recommended when driving at high speeds since the loader is then braked very abruptly.

(1) Lock both doors.

(2) Release the parking brake (4-10/4).

(3) Select the transmission stage (4-11/13) (applies to fast loaders only).

(4) Select the hydraulic drive stage (4-10/13).

(5) Select the travel direction (4-10/12).

(6) Press the accelerator pedal (4-8/2).

NOTE

- The travel speed and the thrust force are altered exclusively by depressing the accelerator pedal.
- When driving up gradients, the travel speed decreases in spite of full throttle in favour of the thrust force.
- The thrust forces and travel speeds are the same in the forward and the reverse direction.

CAUTION

- Observe the load indicator (4-5) during operation, in particular when picking up loads. The load indicator continuously informs the driver of the current load state of the telescope loader.
- If the hydraulic oil temperature indicator lamp (4-11/26) lights up during operation, the loader must be switched off immediately, the cause must be determined by a hydraulics expert and the malfunction must be eliminated.

DANGER

If driving with the telescope arm swivelled is required in special cases, the bucket/attachment must be positioned close over the wheel and the travel distance must be kept as short as possible. If unevenness of the ground causes the support system to lift a wheel off the ground, the telescope arm must be briefly swivelled in the direction of travel so that the axle block can be cancelled.

5.2.5 Heater and ventilation system

5.2.5.1 Setting the air flow

(1) Turn the rotary switch (5-5/arrow) for the blower to position 0, 1 or 2, depending on the amount of air desired.

Figure 5-5

(2) Adjust the direction of the air flow by means of the lateral nozzles (5-6/arrow).

Figure 5-6

5.2.5.2 Switching on the heater

(1) Depending on the heat required, turn the ball valve lever (5-7/arrow) to a vertical or front position.

NOTE

Ball valve vertical - cold.

Ball valve to the front - warm.

(2) Adjust the amount of air as described under 5.2.5.1.

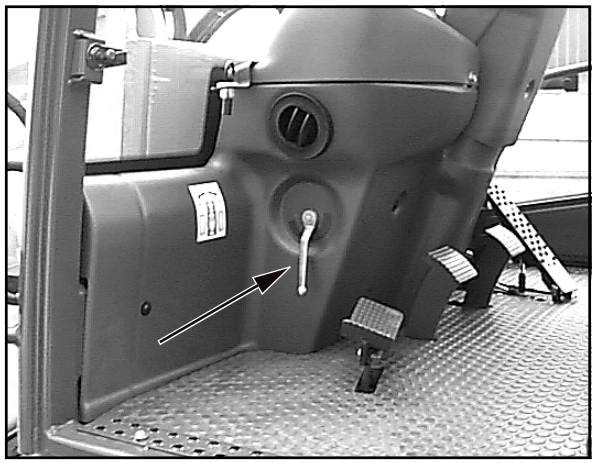

Figure 5-7

5.3 Decommissioning the loader

5.3.1 Parking the loader

(1) Stop the loader on solid ground; if possible, not on a slope.

(2) Place the bucket or the attachment on the ground.

(3) Set the drive switch (4-10/12) to “0”.

(4) Apply the parking brake (4-10/4).

DANGER

If parking on a gradient cannot be avoided, wheel chocks must be used and placed on the sloping side in front of the front axle wheels **in addition** to applying the parking brake.

5.3.2 Switching off the diesel engine

CAUTION

If the diesel engine is very hot or has been subjected to heavy loads, let the engine idle for a short time before switching it off.

Turn the ignition key to the left to position “0“ (5-1) and remove the key.

NOTE

In position “P“, the parking light and the dashboard illumination remain switched on.

5.3.3 Switching off the heater and ventilation system

(1) Shut off the hot air supply (5-7/arrow).

(2) Turn the rotary switch (5-5/arrow) for the blower to position “0“.

5.3.4 Leaving the loader

(1) Secure the hand lever for the working and auxiliary hydraulics (1-2/arrow).

(2) Remove the ignition key and lock the doors.

DANGER

The right driver’s cab door may be used as an emergency exit only.

5.4 Adjusting the driver's seat

5.4.1 Isri seat

(1) Adjust or swing forward the backrest using the hand lever (5-8/3).

(2) Fasten the safety belt (5-8/2).

(3) Adjust the seat height and rear inclination by pulling the hand lever (5-8/4) upwards.

(4) Adjust the seat height and front inclination by pulling the hand lever (5-8/5) upwards.

(5) The seat suspension can be adjusted to the driver's weight (40 - 130 kg) with the handwheel (5-9/1).

(6) Adjust the height of the arm rest by turning the knob (5-8/1).

(7) Readjust the position of the pilot valve for the working and auxiliary hydraulics (4-10/9) if necessary.

(8) The operator's seat can be adjusted in the horizontal direction to suit the driver's requirements by pulling the handle (5-9/2) upwards and moving the seat forward or backward.

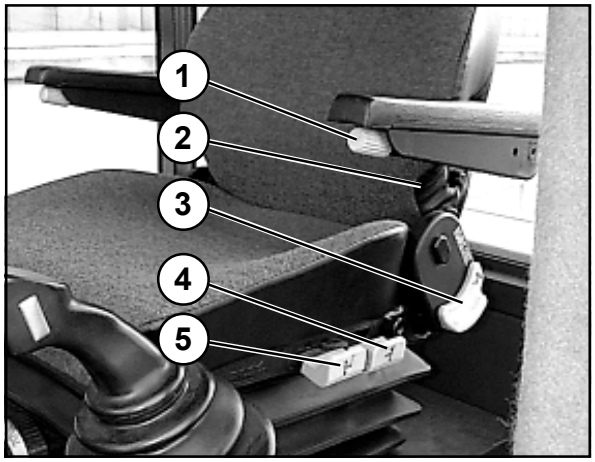

Figure 5-8

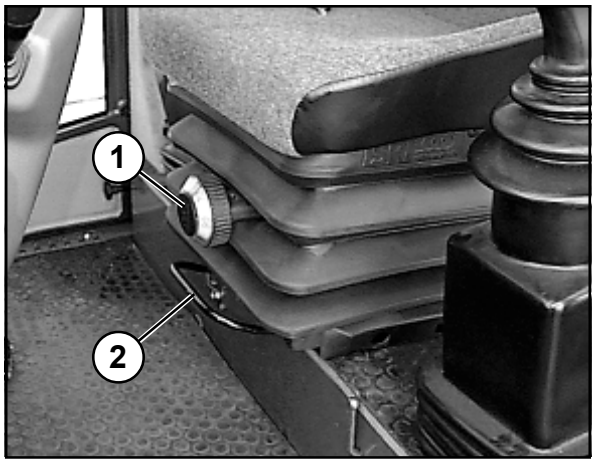

Figure 5-9

5.4.2 Grammer seat

(1) **Weight adjustment:**
Adjust the seat to the driver's weight by actuating the weight adjustment lever. The set driver's weight is visible in the ispection window (5-10).

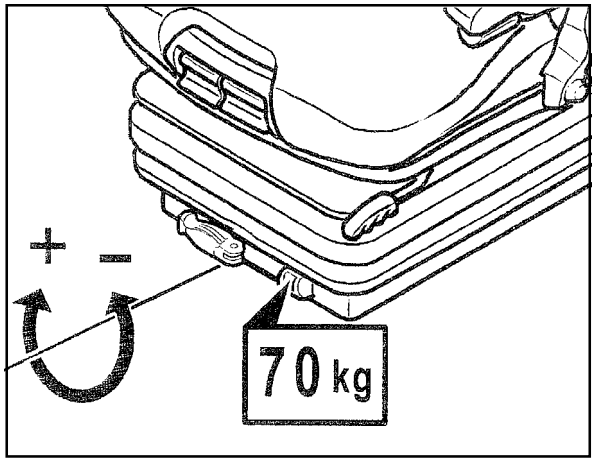

Figure 5-10

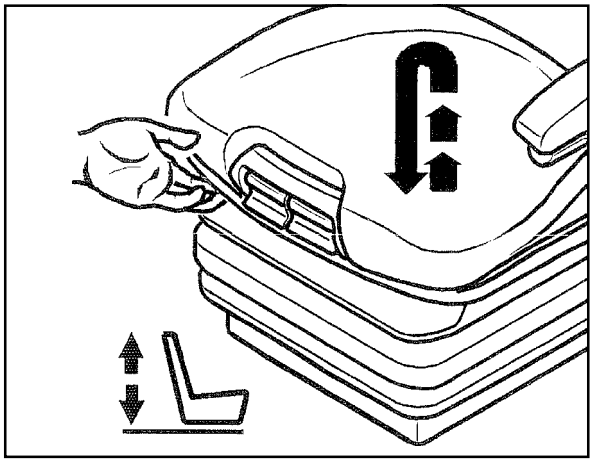

Figure 5-11

(2) **Height adjustment:**
The height can be adjusted in several steps.
Lift the driver's seat to the desired height until it can be heard to engage. The seat returns to the lowest position when it is lifted over the topmost position (stop) (5-11).

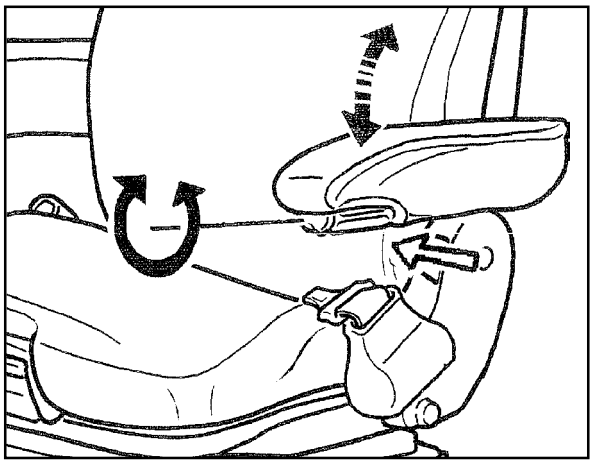

Figure 5-12

(3) **Armrest inclination:**
Turn the handwheel (5-12/arrow) to adjust the armrest in longitudinal direction.

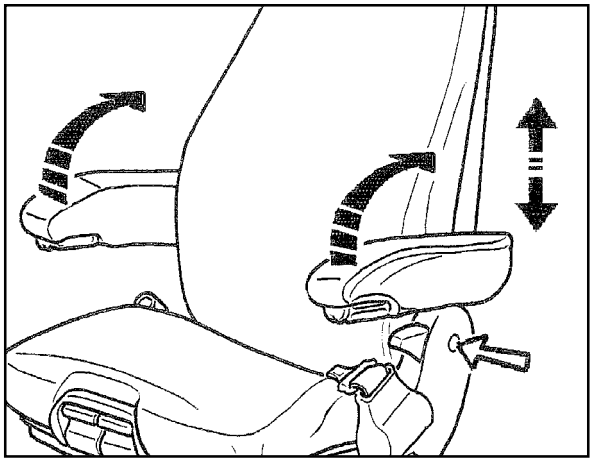

Figure 5-13

(4) **Armrests:**
If desired, you can swing the armrests to the rear and adjust their height.

To adjust the armrest height, remove the round cap (5-13/arrow) in the covering.

Loosen the hex nut (wrench size 13 mm), set the armrest as desired and tighten the nut again. Push the removed cap onto the nut again.

(5) **Adjusting the backrest:**
Use the locking lever (5-14/arrow) to adjust the backrest.

NOTE

The locking lever must engage in the desired position. It must be impossible to move the backrest to another position when the lever has engaged.

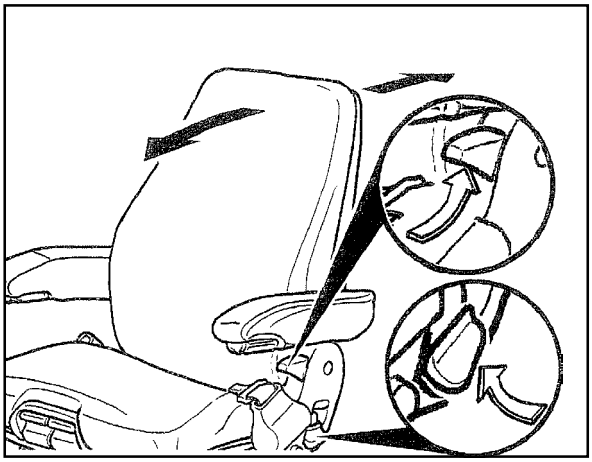

Figure 5-14

(6) **Longitudinal adjustment:**
You can adjust the seat in longitudinal direction when you pull the lever (5-15) upwards.

NOTE

The locking lever must engage in the desired position. It must be impossible to move the driver's seat to another position when the lever has engaged.

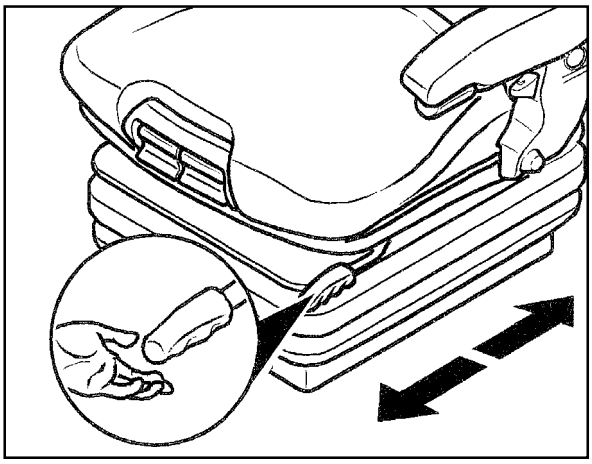

Figure 5-15

5.5 Switching the steering type

CAUTION

- The wheels of the rear axle must be straight before the switching lever (5-16/arrow) can be applied.
- Switching the steering is only allowed when the loader is at a standstill. To switch the steering type, move the hand lever towards you (rear-wheel steering) or away from you (four-wheel steering).

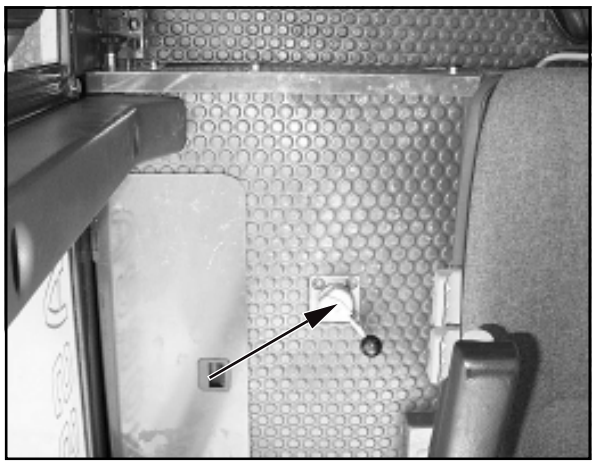

Figure 5-16

Attachments

Figure 6-1

6 Attachments

6.1 Mounting and dismounting attachments without hydraulic connections

6.1.1 Standard/lightweight bucket

Mounting

(1) Bring the telescope arm to its lowest position and tip the quick-change device.

(2) Drive the loader up to the bucket (6-1).

(3) Pick up the bucket using the quick-change device and, by simultaneously tilting the quick-change device, raise the bucket until the quick-change device is next to it (6-2).

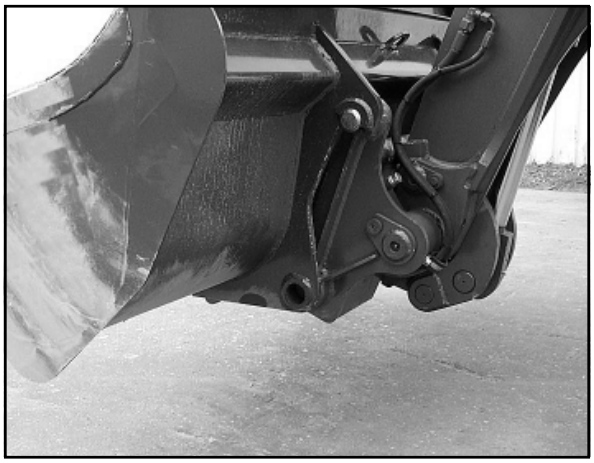

Figure 6-2

(4) Lock the bucket (6-3) with the hand lever for the auxiliary hydraulics (4-10/2).

(5) Check that the device is mounted and locked correctly on both sides.

DANGER

- The two bolts of the quick-change device must be in the bore holes of the bucket carrier and must be clearly visible (6-3/arrow).
- Check prior to commencing work if the swivel restriction is enabled. For this purpose, the toggle switch (4-11/14) top must be pushed and the switch locked.
- Observe the load indicator (option) (4-5) when working with the standard/lightweight bucket (chapter 4.2.14).

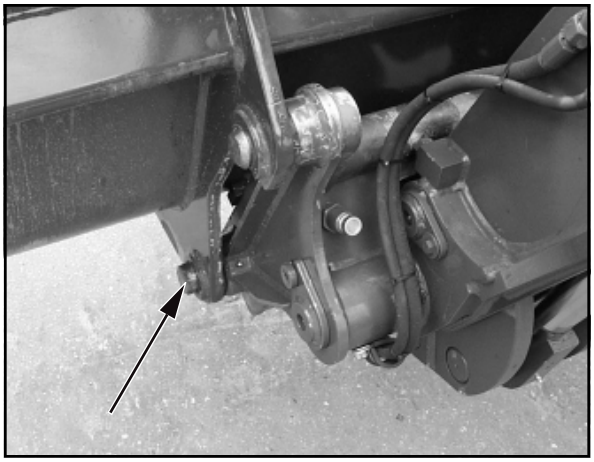

Figure 6-3

Dismounting

(1) Place the bucket on the ground in a stable position and protect it from toppling over if necessary to prevent the risk of injury.

(2) Press the release button for the quick-change device (4-11/2) and unlock the bucket with the hand lever for the auxiliary hydraulics (4-10/2).

(3) Tilt the quick-change device and reverse out.

NOTE

The type plate is on the rear of the bucket, on the right-hand side of the cross arm.

6.1.2 Fork-lift attachment

NOTE

Mounting and dismounting are carried out in the same way as for the standard/lightweight bucket (section 6.1.1).

DANGER

- The two bolts of the quick-change device must be in the bore holes of the fork-lift attachment carrier and must visibly protrude (6-4/arrow).
- Check prior to commencing work if the swivel restriction is enabled. For this purpose, the toggle switch (4-11/14) top must be pushed and the switch locked.
- Distribute the load equally on both fork tines and secure it against moving and falling off.
- Let the load rest against the rear of the fork and tilt the fork-lift attachment.
- Position both fork tines at an equal distance from the centre (6-5/arrows) and lock them.
- Protect the fork-lift attachment against tipping over when it has been dismounted; danger of injuries!

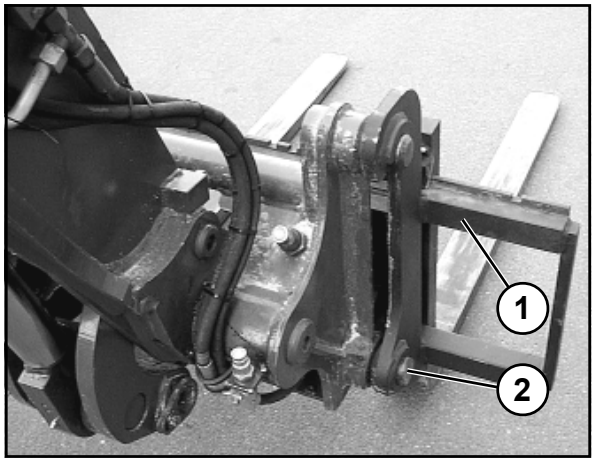

Figure 6-4

NOTE

- The fork tines are locked correctly when the two tiltable locking levers fully rest on the fork carrier.
- The type plate is on the rear of the upper fork carrier (6-4/1).

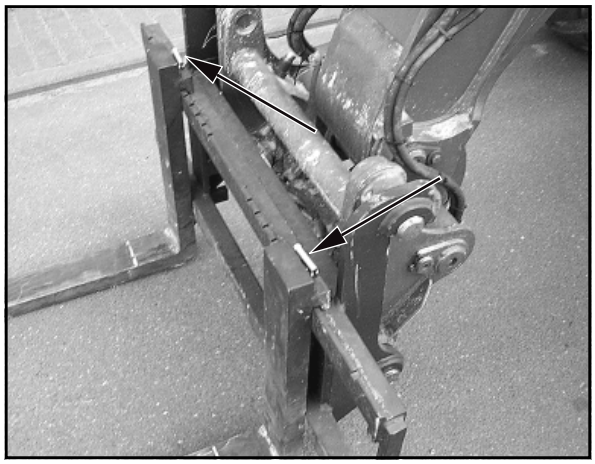
Figure 6-5

6.1.2.1 Picking up an elevated load

DANGER

- Always approach the load at right angles.

- Before picking up an elevated load, the telescope loader must be horizontally aligned in traverse direction. Align the telescope loader while the telescope arm is retracted. While doing so, the spirit level bubble (4-8/5) must be between the two markings.

- The telescope arm should be extended as little as possible. When introducing the forks, make sure there is sufficient clearing between the telescope loader and the stack where the load to be picked up is located.

- Make sure prior to lifting a load that the steering is straight ahead if possible.

- Slightly lift and tilt up the load to stabilise it after having picked up an elevated load.

- Observe the load indicator (4-5) (chapter 4.2.14):

  - Retract telescope and move swivel unit to a straight forward position if one of the red LEDs lights up.
  - Deposit the load immediately and reduce the weight if possible when one of the red LEDs is still lit.

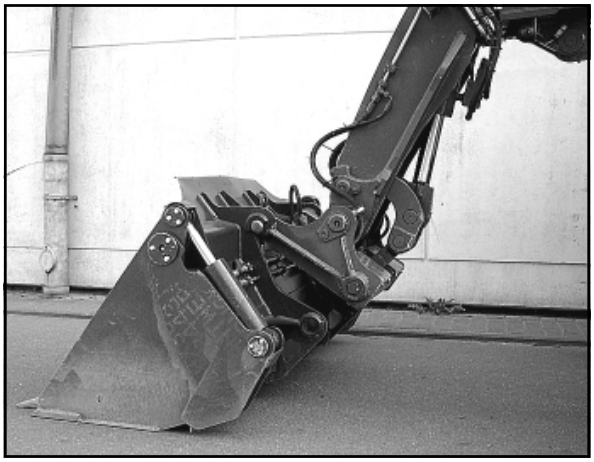

Figure 6-6

NOTE

The same instructions as for picking up an elevated load analogously apply to depositing an elevated load.

6.1.3 Lifting hook

NOTE

Mounting and dismounting are carried out in the same way as for the standard bucket (section 6.1.1).

DANGER

- Both bolts of the quick-change device must be in the boreholes of the lifting hook carrier and must clearly protrude on both sides.
- Check the safety flap of the crane hook for proper functioning.
- Check prior to commencing work if the swivel restriction is enabled. For this purpose, the toggle switch (4-11/14) top must be pushed and the switch locked.
- Observe the load indicator (4-5) when working with the lifting hook (chapter 4.2.14).
- Protect the lifting hook against tipping over when it has been dismounted; danger of injuries!

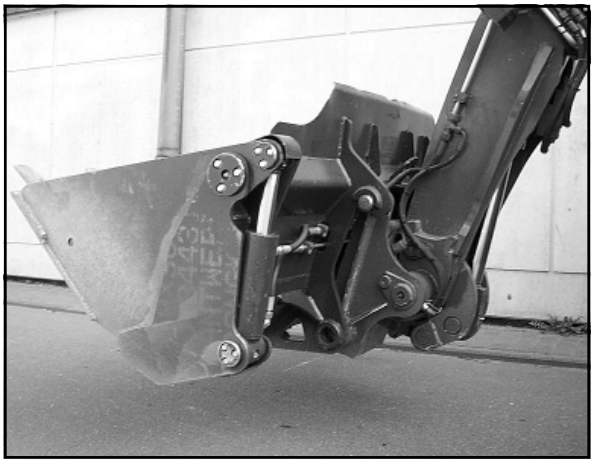

Figure 6-7

6.2 Mounting and dismounting attachments with hydraulic connections

6.2.1 Multi-purpose bucket

Mounting

(1) Bring the telescope arm to its lowest position and tip the quick-change device.
(2) Drive the loader up to the bucket (6-6).
(3) Pick up the bucket using the quick-change device and, by simultaneously tilting the quick-change device, raise the bucket until the quick-change device is next to it (6-7).
(4) Lock the bucket (6-8) with the hand lever for the auxiliary hydraulics (4-10/2).
(5) Check that the device is mounted and locked correctly on both sides.

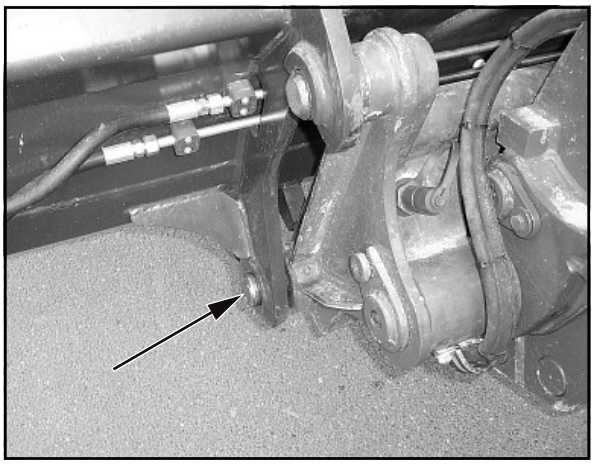

Figure 6-8

DANGER

- The two bolts of the quick-change device must be in the bore holes of the bucket carrier and must clearly protrude (6-8/arrow).
- Check prior to commencing work if the swivel restriction is enabled. For this purpose, the toggle switch (4-11/14) top must be pushed and the switch locked.
- Observe the load indicator (4-5) when working with the multi-purpose bucket (chapter 4.2.14).

(6) Shut down the engine.
(7) Depressurise the hydraulic lines by moving the hand lever for the auxiliary hydraulics (4-10/2) to and fro.
(8) Pull off the protective caps from the hoses of the quick-change device (6-9/1).
(9) Swing up the protective flaps of the quick-change couplings on the multi-purpose bucket (6-9/2) and connect them with the hoses of the quick-change device (6-9) by tightly pushing them in.

CAUTION

When making connections, make sure that the hydraulic connections are clean and completely connected.

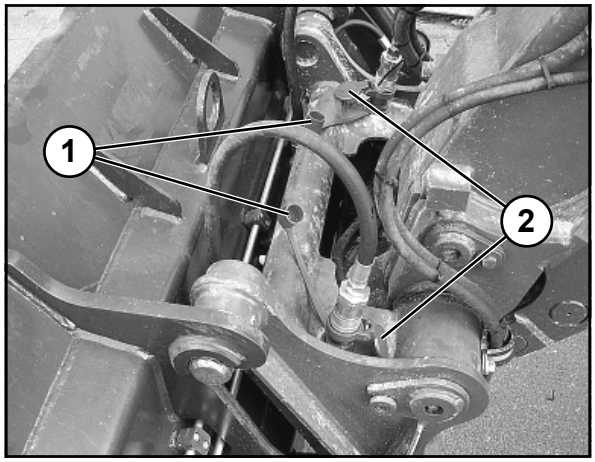

Figure 6-9

Dismounting

(1) Place the multi-purpose bucket on the ground in a stable position and protect it from toppling over if necessary to prevent the risk of injury.
(2) Shut down the engine.
(3) Depressurise the hydraulic lines by moving the hand lever for the auxiliary hydraulics (4-10/2) to and fro.
(4) Dismounting takes place in the reverse order of mounting. However, to unlock the multi-purpose bucket, the release button for the quick-change device (4-11/2) must be used.

NOTE

The type plate is on the rear of the bucket, on the right-hand side beneath the cross arm.

Figure 6-10

Notes on the application of the multi-purpose bucket

The multi-purpose bucket can be used for:

- peeling (6-10)

- scraping (6-11)

Figure 6-11

Figure 6-12

- grabbing (6-12) and

- in bucket operation.

6.3 Use of additional attachments

DANGER

1. Only those attachments described in these operating instructions may be used.

2. We emphasise that attachments that are not supplied by us are also not tested and approved by us. Use of such products can under certain conditions adversely affect the present constructional qualities of your loader and thus limit the active and passive driving safety. The manufacturer cannot be held responsible for damage that occurs through the use of such products.

Rescue, towing, lashing, lifting by crane

7 Rescue, towing, lashing, lifting by crane

7.1 Rescue, towing, lashing

7.1.1 Rescue/towing of the swivel shovel loader if the engine or drive has failed

DANGER

Secure the rescue location if it is on a public road.

CAUTION

The swivel shovel loader must not be tow-started. Any attempt to tow-start leads to damage.

NOTE

- Towing is only permitted to clear the site or a street.
- Preparation for towing depends on whether the engine has failed, thus causing a failure of the entire hydraulic system, or if only the drive has failed and the engine can drive the rest of the hydraulic system.

7.1.1.1 Towing the swivel shovel loader if the engine has failed

(1) Actuate the toggle switch for the hazard flasher (4-11/10).
(2) Set the drive switch (4-10/12) to “0”.

NOTE

The preparations described in steps (3), (5), (6) and (11) are only to be carried out if the rescue location is **not** on a public road:

(3) After the front-axle wheels have been straightened, switch the switching lever for the steering (4-9/2) to the “rear-axle steering“ position.

(4) Apply the parking brake (4-10/4).

CAUTION

If the rescue location is on a slope, wheel chocks must be placed on the sloping side of both front axle wheels in addition to applying the parking brake.

(5) Cover the bucket cutting edge and teeth with the bucket protector (5-3/arrow).

(6) Insert the plug of the bucket protector into the socket (5-4/arrow, option).

(7) Push the valve lever for the working hydraulics (4-10/9) beyond its pressure point into the forward position.

(8) Using a suitable lifting device, e.g. a second telescope loader with an attached bucket, lift the telescope arm of the telescope loader to be towed until the mechanical telescope arm support can be inserted at the loader to be towed (7-1).

(9) Lift and mechanically prop up the telescope arm [e.g. by inserting the bucket arm support (option) (1-1/arrow)] and lower the telescope arm until it rests on the telescope arm support.

(10) Close the ball block valve for the working and auxiliary hydraulics (1-2/arrow).

(11) Block the swivel unit by inserting the blocking wedge (1-3/arrow) into the swivel block (1-4/arrow).

(12) Attach the tow rod to the loader to be towed [7-2/1 – forwards towing – or 7-4/1 – rearwards towing] and to the towing vehicle.

CAUTION

If the front of the loader does not have a shunting and towing coupling, the loader may only be towed rearwards.

Figure 7-1

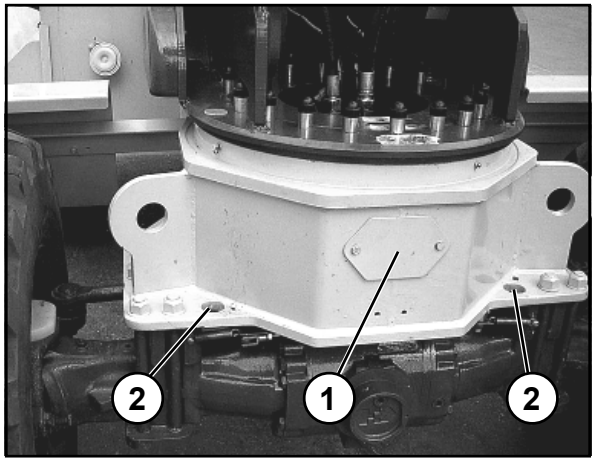

Figure 7-2

(13) Switch the hydrostatic drive motor to free oil flow before towing. For this purpose, screw in the setscrews at both high-pressure relief valves (7-3/arrows) of the drive pump until they are level with the hexagon nuts (size 13) loosened beforehand. Then tighten the hexagon nuts.

NOTE

After towing has been completed, loosen the hexagon nuts again. Screw the setscrews out of both high-pressure relief valves until they stop. Tighten the lock nuts.

(14) Remove the chocks (if applicable).

(15) Release the parking brake (4-10/4).

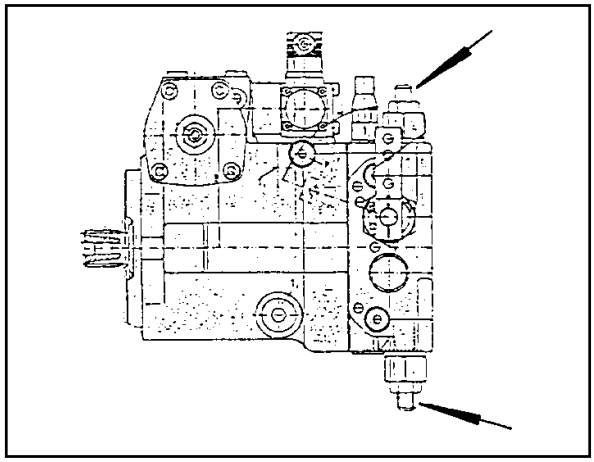

Figure 7-3

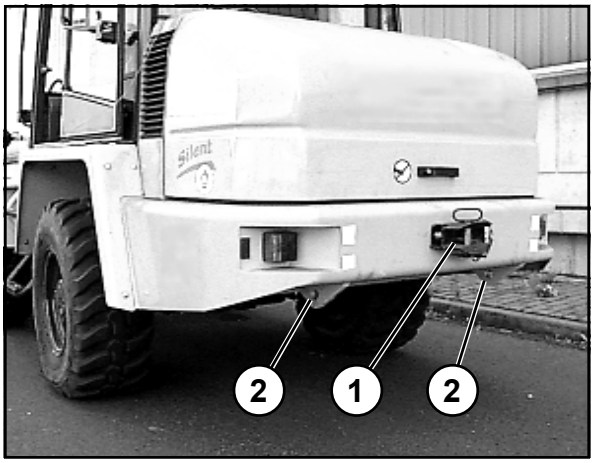

Figure 7-4

DANGER

- More power is required to steer if the engine has failed.
- Tow the loader at walking speed (2 km/h).
- The towing distance should not exceed 1 km.
- For a longer distance, the defective loader must be loaded onto a truck (for the lashing points, see 7-2/1 and 7-2/2 or 7-4/1 and 7-4/2).
  - The max. permissible load of the shunting and towing coupling (7-2/1) is 8.0 t horizontally in the longitudinal direction.
  - The max. permissible load of the rear shunting and towing coupling (7-4/1) is 8.0 t horizontally in the longitudinal direction.
  - The max. permissible load of the lashing points/load-bearing points (7-2/2 and 7-4/2) is 2.0 t at an assumed bracing angle of 45°.

7.1.1.2 Towing the loader if the drive has failed

(1) Actuate the toggle switch for the hazard flasher (4-11/10).

(2) Set the drive switch (4-10/12) to “0”.

NOTE

The preparations described in steps (3), (5), (6) and (9) are only to be carried out if the rescue location is **not** on a public road:

(3) After the front-axle wheels have been straightened, switch the switching lever for the steering (4-9/2) to the “rear-axle steering“ position.

(4) Apply the parking brake (4-10/4).

CAUTION

If the rescue location is on an uphill/downhill grade, wheel chocks must be placed on the sloping side of both front axle wheels in addition to applying the parking brake.

(5) Cover the bucket cutting edge and teeth with the bucket protector (5-3/arrow).

(6) Insert the plug of the bucket protector into the socket (5-4/arrow, option).

(7) Lift and mechanically prop up the telescope arm [e.g. by inserting the telescope arm support (option) (1-1/arrow)] and lower the telescope arm until it rests on the telescope arm support.

(8) Close the ball block valve for the working and auxiliary hydraulics (1-2/arrow).

(9) Block the swivel unit by inserting the blocking wedge (1-3/arrow) into the swivel block (1-4/arrow).

(10) Attach the tow rod to the loader to be towed [7-2/1 – forwards towing – or 7-4/1 – rearwards towing] and to the towing vehicle.

CAUTION

If the front of the loader does not have a shunting and towing coupling, the loader may only be towed rearwards.

(11) Switch the hydrostatic drive motor to free oil flow before towing. For this purpose, screw in the setscrews at both high-pressure relief valves (7-3/arrows) of the drive pump until they are level with the hexagon nuts (size 13) loosened beforehand. Then tighten the hexagon nuts.

NOTE

After towing has been completed, loosen the hexagon nuts again. Screw the setscrews out of both high-pressure relief valves until they stop. Tighten the lock nuts.

(12) Remove the chocks (if applicable).

(13) Release the parking brake (4-10/4).

DANGER

- With the engine running, tow the loader at walking speed (2 km/h).
- The towing distance should not exceed 1 km.
- For a longer distance, the defective loader must be loaded onto a truck (for the lashing points, see 7-2/1 and 7-2/2 or 7-4/1 and 7-4/2).

NOTE

Refer to page 7-4 for maximum permissible load capacity of lashing/load-bearing points.

7.2 Lifting by crane

The loader to be lifted must be prepared as follows:

(1) Set the drive switch (4-10/12) to “0”.

(2) Set transmission stage “I“ (4-11/13) (applies to fast loaders only).

(3) Set hydraulic drive stage “I“ (4-10/13).

(4) Apply the parking brake (4-10/4).

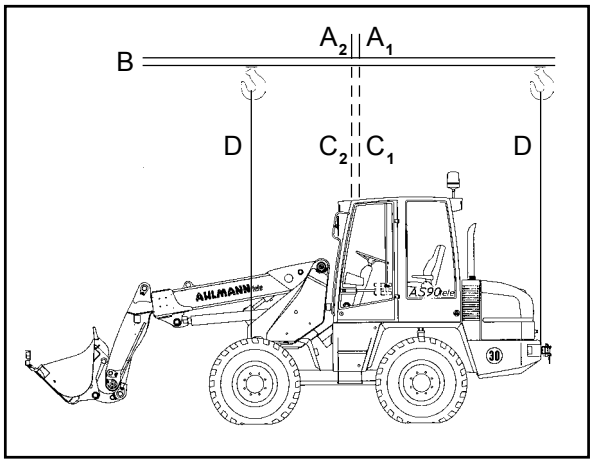

Figure 7-5

(5) Lift or lower the telescope arm until the lowest point of the telescope arm or of the bucket is at least 30 cm above the road (5-2).

(6) Close the ball block valve for the working and auxiliary hydraulics (1-2/arrow).

(7) Block the swivel unit by inserting the blocking wedge (1-3/arrow) into the swivel block (1-4/arrow).

(8) Lock both doors.

(9) Fold the outside mirror inwards.

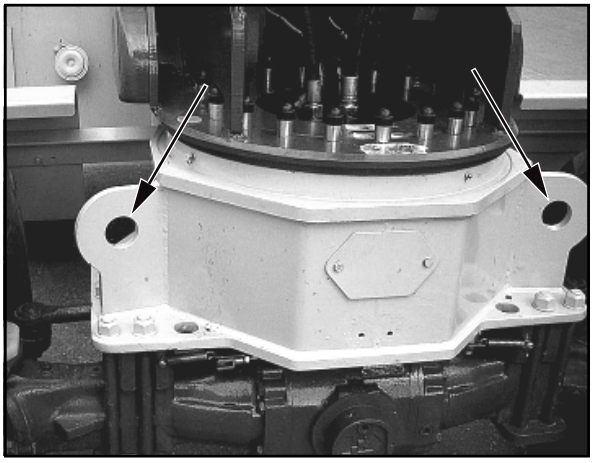

Figure 7-6

CAUTION

The following items must be observed when lifting the loader by crane (Figure 7-5):

- The lifting point (A_1 - loader without standard bucket or A_2 - loader with standard bucket) of the lifting device (B) must be precisely vertically over the centre of gravity (C_1 or C_2) of the loader so that the lifting device is **horizontally** above the longitudinal centre axis of the loader.
- The lifting gear (D) must lead vertically upwards from the lifting points of the loader (7-6/arrows and 7-7/arrows).

DANGER

The lifting gear must have a lifting capacity of at least 4.0 t.

Figure 7-7

Maintenance

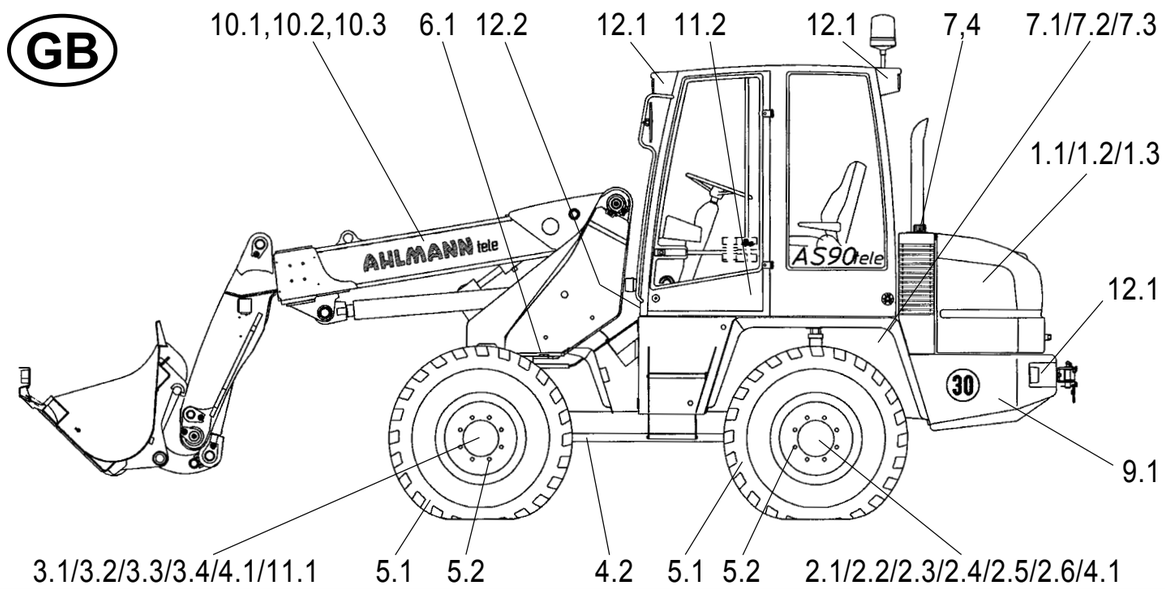

Item	Designation	Specification	Viscosity	Filling amount
* 1	Motor oil	MIL-L-2104 C = API-CD	acc. to manufacturer	ca. 10 l with oil filter
* 2.2	Transmission oil	MIL-L-2105 D = API-GL5-6	SAE 85 W 90	ca. 6,25 l
* 2.4	Transmission oil	MIL-L-2105 D = API-GL5-6	SAE 85 W 90	ca. 2 x 0.75 l
* 2.6	Transmission oil	MIL-L-2105 D = API-GL5-6	SAE 85 W 90	ca. 1.9 l (20 km/h) ca. 1.6 l (30 km/h)
* 3.2	Transmission oil with LS additive	MIL-L-2105 D = API-GL5-6-LS	SAE 85 W 90-LS	ca. 6.25 l
* 3.4	Transmission oil	MIL-L-2105 D = API-GL5-6	SAE 85 W 90	ca. 2 x 0.75 l
* 7.3	Hydraulic oil (4)	DIN 51524, HVLP 46	ISO VG 46, VI > 180	ca. 120 l
8	Grease	DIN 51825 - KPF 1/2 N-20		as required
9	Distilled water			as required
* 10	Mineral oil	DIN 51524, HVLP 46	ISO VG 46, VI > 180	as required

Key to symbols

△ First oil change / first filter replacement

▲ First check; eliminate any determined problems

○ Check; eliminate any determined problems

◇ Change

* The markings, filling and check plugs are binding

Refer to operating instructions

Caution
When carrying out maintenance work, heed the accident prevention regulations!

Lubrication points (indicated in red)

1. Lubricate bolts every 10 operating hours with grease DIN 51825 - KPF 1/2 N-20.
2. Lubricate glide points as required and always after cleaning, using grease DIN 51825 - KPF 1/2 N-20.

Oil lubrication points

3. Lubricate joints and toggle levers every 50 operating hours wih engine oil MIL-L-2104 C.

Optional features: Biodegradable hydraulic oil

4. Ester-based synthetic hydraulic oil. Viscosity class ISO VG 46 VI > 180

CAUTION Use only mineral oil for the service brake!

Every x operating hours 10	50	500	1500	Item	Maintenance points (max. permitted intervals or shorter (depending on use))
				1.	**Engine**
○	△			1.1	Maintenance according to manufacturer's regulations
				1.2	Dry air filter system
	○				Activate dust removal valve
	○				Check maintenance display
				1.3	Replace filter element if maintenance display is red
				2	**Rear axle with axle power shift gear or gear shift**
	○			2.1	Check oil level in axle gear (control screw)
		△	◇	2.2	Change oil in axle gear
	○			2.3	Check oil level in planetary gear (control screw)
		△	◇	2.4	Change oil in planetary gear
	○			2.5	Check oil level in distributiongear (control screw)
		△	◇	2.6	Change oil in distributiongear
				3	**Front axle**
	○			3.1	Check oil level in axle gear (control screw)
		△	◇	3.2	Change oil in axle gear
	○			3.3	Check oil level in planetary gear (control screw)
		△	◇	3.4	Change oil in planetary gear
				4	**Axles / cardan shaft(s)**
	▲	○		4.1	Check fastening of axles (385Nm)
	▲	○		4.2	Check fastening of cardan shaft(s) (32 Nm)
				5	**Wheels and tyres**
	○			5.1	Check air pressure
▲		○		5.2	Check fastening of wheel nuts (500 Nm)
				6	**Ball bearing slewing ring**
	▲	○		6.1	Check fastening (300 Nm)
				7	**Hydraulic system**
	△		◇	7.1	Replace filter inserts, observe electric control lamp
○				7.2	Oil level check (view glass)
			◇	7.3	Oil change
○				7.4	Check and clean hydraulic oil cooler
				8	**Lubrication points (indicated in red)**
				9	**Battery**
		○		9.1	Visual check
				10	**Arm**
			○	10.1	Wear of waer plates on the arm
			○	10.2	Overall condition of the arm
			○	10.3	Bearings and bearing rings
				11	**Brake system**
				11.1	Service and parking brake: Take function and visual check before starting work
○				11.2	Service brake: visually check compensation tank
		○		11.3	Parking brake: check and adjust if required
				12	**Lighting system / fresh air filter**
				12.1	Take function test before starting work
		○	◇	12.2	Check fresh air filter

8 Maintenance

8.1 Notes regarding maintenance

DANGER

- The engine must be turned off.
- For work to be carried out under the telescope arm:
  - the bucket must be emptied or the attachment must be relieved,
  - the telescope arm must be mechanically propped up [e.g. by inserting the telescope arm support (option)(1-2/arrow)],
  - the ball block valve for the working and auxiliary hydraulics (1-2/arrow) must be closed.
  - the swivel mechanism is to be blocked (1-4/arrow)
- The loader must be secured against rolling by applying the parking brake (4-10/4) and by setting the drive direction switch (4-10/12) to position “0“. In addition, wheel chocks must be placed on both sides of one of the two wheels of the front axle.

CAUTION

- Change the oil when the units are lukewarm.
- Perform maintenance work when the loader is on level ground and the telescope arm is in its lowest position.
- Replace damaged filter inserts and gaskets immediately.
- Clean grease nipples before lubricating.

NOTE

- For any necessary maintenance work refer to the maintenance plan.
- Damage which is traceable to non-observance of the maintenance plan is not covered by the warranty.
- The lubricants listed in the maintenance plan can be used at ambient temperatures ranging from **-15° C** to **+40° C**.

CAUTION

For ambient temperatures below 15° C, refer to the description in chapter 5.2.2 “Winter operation”.

NOTE

If a hose and/or pipe break occurs, the two lids of the hydraulic oil filter (8-20/arrows) must be loosened because the loader does not have a shut-off valve that could prevent large amounts of hydraulic oil from escaping.

8.2 Maintenance work

8.2.1 Engine oil level check

See the operating instructions for the engine.

8.2.2 Oil level check for axles

8.2.2.1 Rear axle » slow loader «

(1) Unscrew the plugs from the axle arch (8-1/arrow) and the intermediate gear (8-2/arrow).

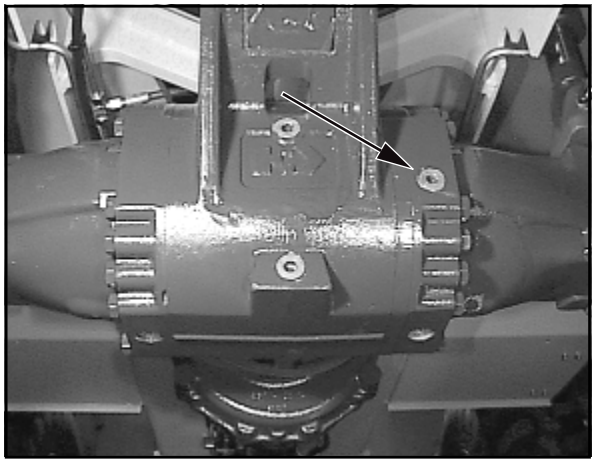

Figure 8-1

NOTE

- The axle arch and the intermediate gear do not have a common oil reservoir.
- The oil level must reach the plug bore.
- Collect any oil that escapes.

(2) Screw in the plug again.

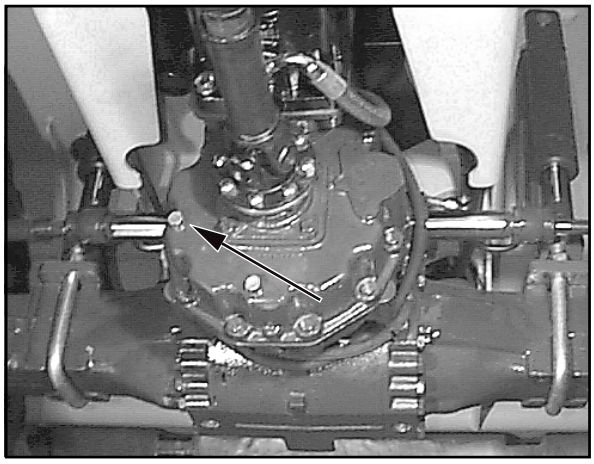

Figure 8-2

8.2.2.2 Rear axle » fast loader «

(1) Unscrew the plugs from the axle arch (8-3/arrow) and the intermediate gear (8-4/arrow).

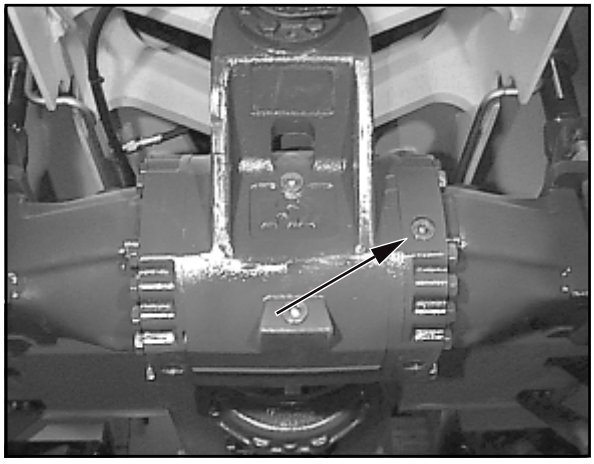

Figure 8-3

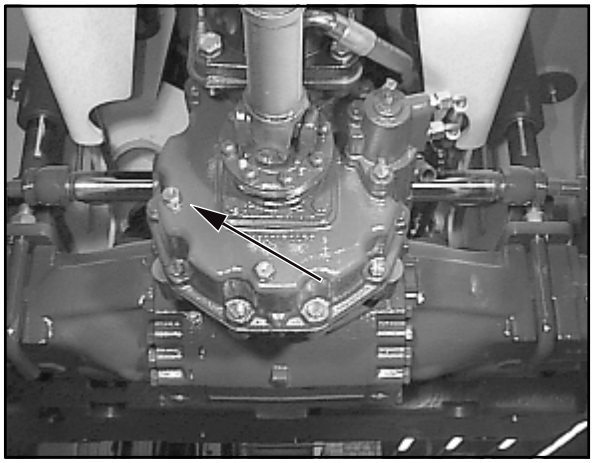

Figure 8-4

NOTE

- The axle arch and the distribution gear do not have a common oil reservoir.
- The oil level must reach the plug bores.
- Collect any oil that escapes.

(2) Screw in the plug again.

Figure 8-5

8.2.2.3 Planetary gear

(1) Move the loader until the marking line "OIL LEVEL" is horizontal and the plug is located above the top left of the marking line (8-5/arrow).

(2) Unscrew the plug.

NOTE

- The oil level must reach the plug bore.
- Collect any oil that escapes.

(3) Fit a new gasket and screw the plug back in.

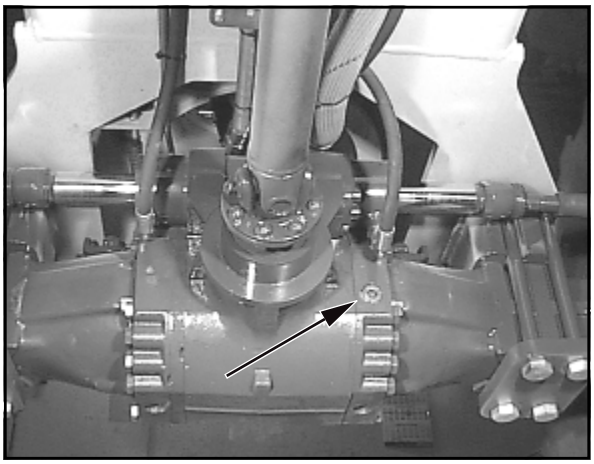

Figure 8-6

8.2.2.4 Front axle

(1) Unscrew the plug from the axle arch (8-6/arrow).

NOTE

- The oil level must reach the plug bore.
- Collect any oil that escapes.

(2) Screw in the plug again.

8.2.3 Oil level check in the hydraulic oil reservoir

(1) Park the loader in a level position.

(2) Move the telescope arm to its lowest position.

(3) Tilt the quick-change device, retract the telescope and move out the locking bolts using the hand lever for the auxiliary hydraulics (4-10/2).

(4) Open the motor hood.

(5) Check the oil level in the sight glass.

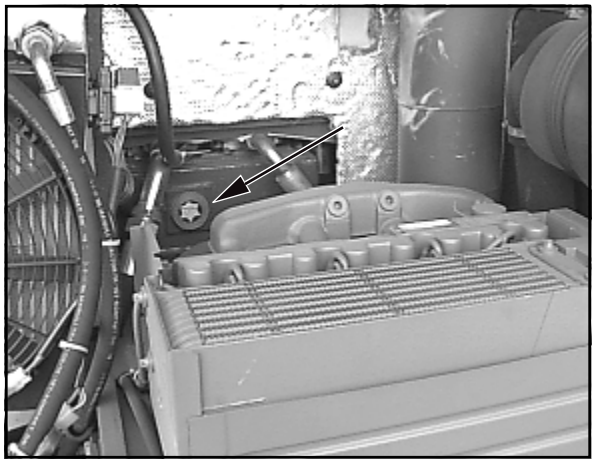

Figure 8-7

NOTE

The oil level must be visible in the upper quarter of the sight glass (8-7/arrow). If necessary, fill oil into the filler neck (8-18/arrow).

8.2.4 Oil change, engine

(1) Unscrew the maintenance flap from the motor protection (size 13) (8-8/arrow).

(2) Place a sufficiently large oil drain pan underneath.

(3) Open the motor hood.

(4) Unscrew the cover of the oil drain plug on the motor.

(5) Screw the drainage nozzle with hose from the tool box (4-1/12) to the oil drain plug.

(6) Remove the cover cap from the hose.

(7) Further procedures are to be found in the Engine Operating Manual.

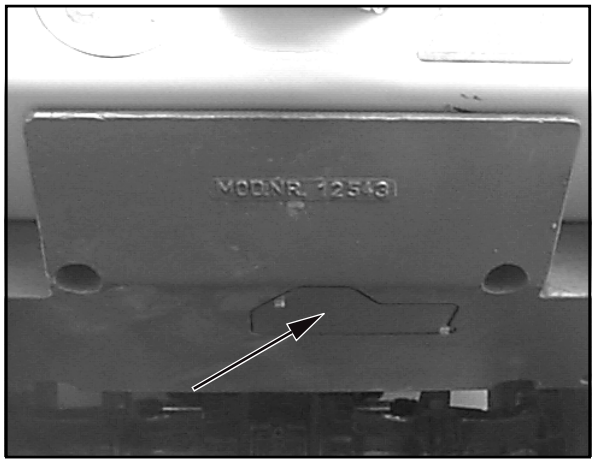

Figure 8-8

8.2.5 Oil change, axles

8.2.5.1 Rear axle » slow loader «

(1) Place a sufficiently large oil drain pan underneath.

(2) Unscrew the plugs from the axle arch (8-9/1, 8-9/2, 8-9/3 and 8-9/4) and the intermediate gear (8-10/1 and 8-10/2) and let the oil drain out.

CAUTION

Waste oil must be disposed of in such a way that it will not cause pollution!

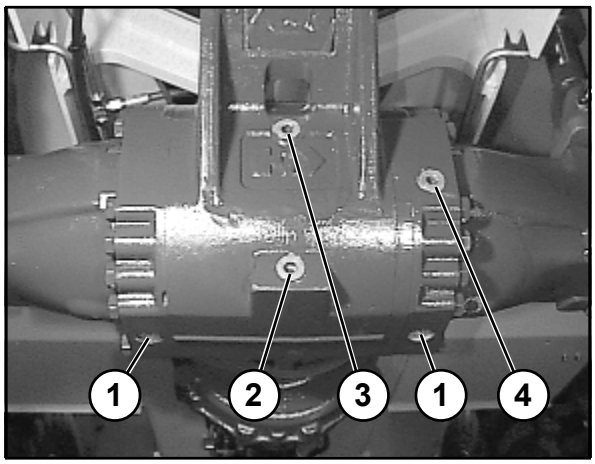

Figure 8-9

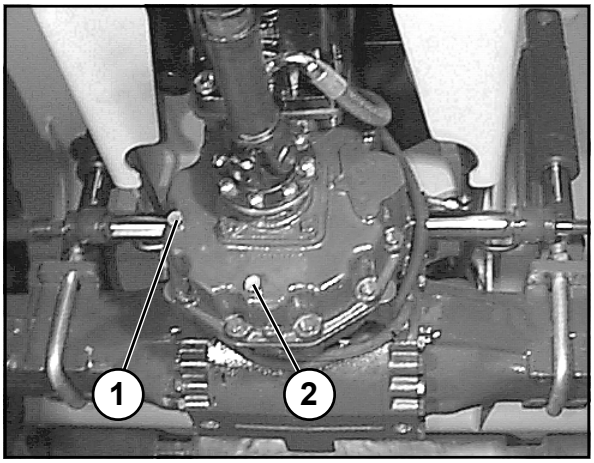

Figure 8-10

(3) Replace the plugs for the axle arch (8-9/1 and 8-9/2) and the intermediate gear (8-10/2).

(4) Fill oil into the plug bore of the axle arch (8-9/3) and the intermediate gear (8-10/1) until the oil level reaches the opening (8-9/4 or 8-10/1).

NOTE

- The axle arch and the intermediate gear do not have a common oil reservoir.
- Information about the quantity of oil is given in the maintenance plan (chapter 8.4).
- After a few minutes, when the oil level has lowered, top up the oil until the oil level reaches the marked level and remains stable.

(5) Replace the plugs for the axle arch (8-9/3 and 8-9/4) and the intermediate gear (8-10/1).

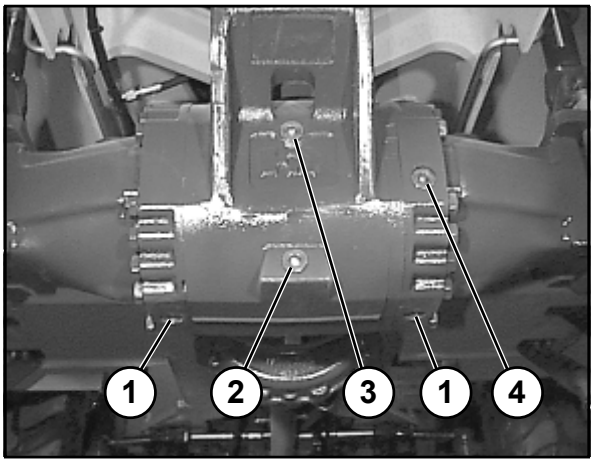

Figure 8-11

8.2.5.2 Rear axle » fast loader «

(1) Place a sufficiently large oil drain pan underneath.

(2) Remove the plugs from the axle arch (8-11/1, 8-11/2, 8-11/3 and 8-11/4) and the distribution gear (8-12/1 and 8-12/2) and drain the oil.

CAUTION

Waste oil must be disposed of in such a way that it will not cause pollution!

(3) Replace the plugs for the axle arch (8-11/1 and 8-11/2) and the distribution gear (8-12/2).

(4) Fill in oil via the plug hole in the axle arch (8-11/3) and the distribution gear (8-12/1) until the oil reaches the opening (8-11/4 or 8-12/1).

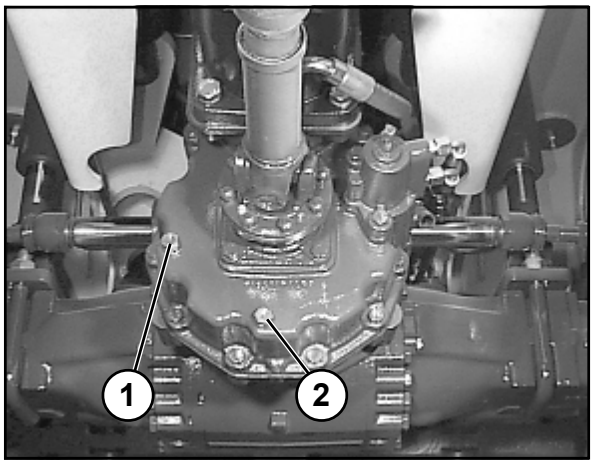

Figure 8-12

NOTE

- The axle arch and the intermediate gear do not have a common oil reservoir.
- Information about the quantity of oil is given in the maintenance plan (chapter 8.4).
- After a few minutes, when the oil level has lowered, top up the oil until the oil level reaches the marked level and remains stable.

(5) Replace the plugs for the axle arch (8-11/3 and 8-11/4) and the intermediate gear (8-12/1).

8.2.5.3 Planetary gear

(1) Move the loader so that the plug (8-13/arrow) is positioned at 6 o'clock.

(2) Place an oil drain vessel with a drain channel underneath the gear.

(3) Unscrew the drain plug and let the oil drain out.

CAUTION

Waste oil must be disposed of in such a way that it will not cause pollution!

Figure 8-13

(4) Move the loader until the marking line "OIL LEVEL" is horizontal and the plug is located above the top left of the marking line (8-14/arrow).

(5) Fill in oil via the plug bore until the oil level reaches the opening.

(6) Use a new gasket when screwing the plug back in.

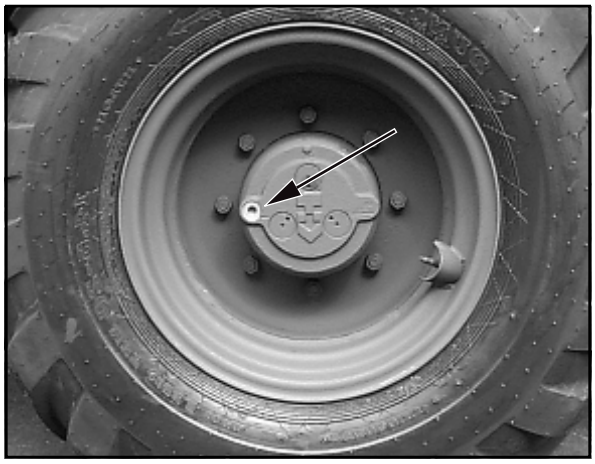

Figure 8-14

8.2.5.4 Front axle

(1) Place a sufficiently large oil drain pan underneath.

(2) Remove the plugs from the axle arch (8-15/1, 8-15/2, 8-15/3, 8-16/1 and 8-16/2) and drain the oil.

CAUTION

Waste oil must be disposed of in such a way that it will not cause pollution!

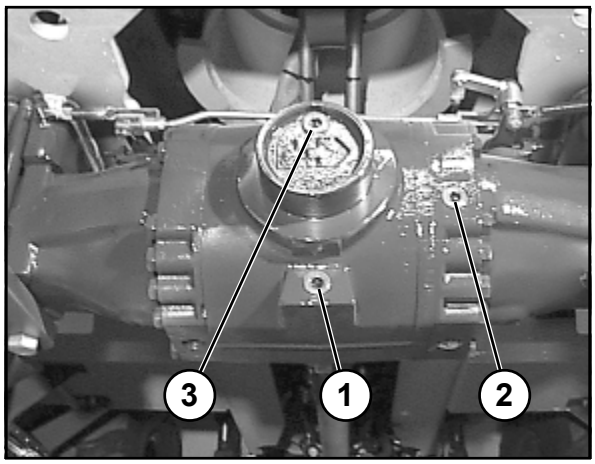

Figure 8-15

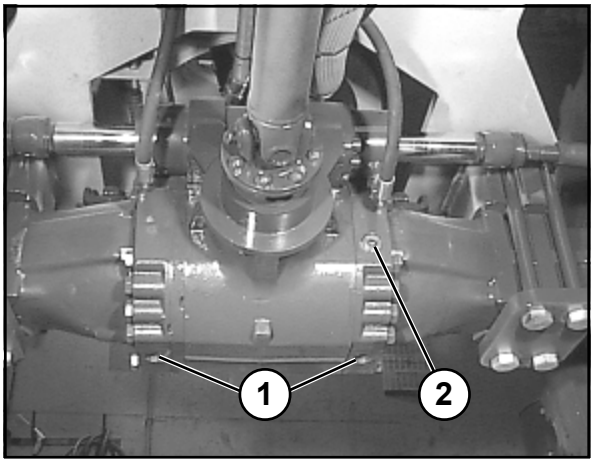

Figure 8-16

(3) Screw the plugs (8-15/1 and 8-16/1) back in.
(4) Fill in oil via the plug bore (8-15/3) until the oil level reaches the opening (8-15/2 or 8-16/2).

NOTE

- Information about the quantity of oil is given in the maintenance plan (chapter 8.4).
- After a few minutes, when the oil level has lowered, top up the oil until the oil level reaches the marked level and remains stable.

(5) Screw the plugs (8-15/2 and 8-15/3 and 8-16/2) back in.

8.2.6 Oil change, hydraulic system

(1) Have an oil pan ready (at least 140 l).
(2) Unscrew the covering flap of the oil drain plug (8-17/arrow).
(3) Screw the drainage nozzle with hose from the tool box (4-1/12) to the oil drain plug.
(4) Remove the cover cap from the hose.
(5) Drain the oil into the oil pan.

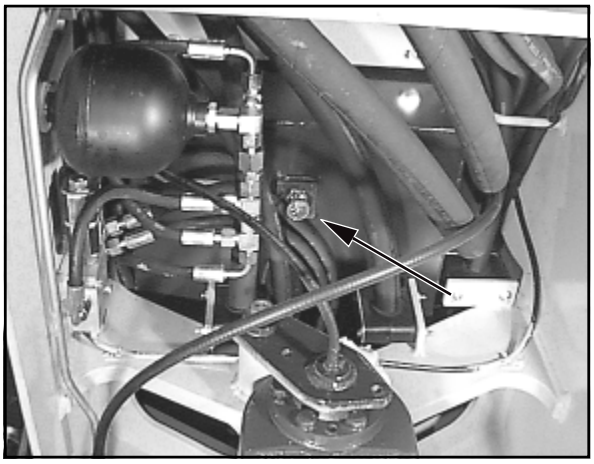

Figure 8-17

CAUTION

Waste oil must be disposed of in such a way that it will not cause pollution!

(6) Remove the nozzle with the hose and replace the cover cap on the hose.
(7) Screw the covering plate onto the oil drain plug.
(8) Change the hydraulic oil filter inserts (section 8.2.7).
(9) Fill oil into the filler neck (8-18/arrow).

CAUTION

For those loaders which are fitted to run with biodegradable hydraulic oil (ester-based synthetic hydraulic oil of viscosity class ISO VG 46 VI > 180) - (designation can be found on the hydraulic oil reservoir and on the dashboard), only this type of oil may be used for oil changes. Mineral and biodegradable hydraulic oils must **never** be mixed!
Biodegradable hydraulic oil must be changed every **1000 operating hours**.
Changing the oil type from mineral oil to biodegradable oil must be performed according to the VDMA 24 569 conversion guidelines.

Figure 8-18

CAUTION

The service brake must only be operated with mineral oil!

(10) Check the oil level at the sight glass (8-7/arrow).
(11) Close the filling nozzle.

8.2.7 Changing the hydraulic oil filter cartridges

CAUTION

Replace the filter cartridge according to the maintenance plan or when the clogging indicator lamp (4-11/25) lights up.

NOTE

The clogging indicator may light up prematurely after a cold start. It will go out when the hydraulic oil warms up.

(1) Move the seat to the frontmost position (5-9/2).

(2) Tilt the backrest of the seat completely forward (5-8/3).

(3) Fold back the insulation mats to the left and the right of the driver's seat, unscrew the four screws (size 13) (8-19/arrows) that fix the maintenance plate and remove the plate.

(4) Loosen the lids of the hydraulic oil filters (8-20/ arrows) and replace the filter cartridges by new ones.

CAUTION

Waste hydraulic oil filter cartridges must be disposed of in such a way that they will not cause pollution.

(5) Lock the lids of the hydraulic oil filters.

(6) Fasten the maintenance plate.

(7) Restore the individual seat position.

Figure 8-19

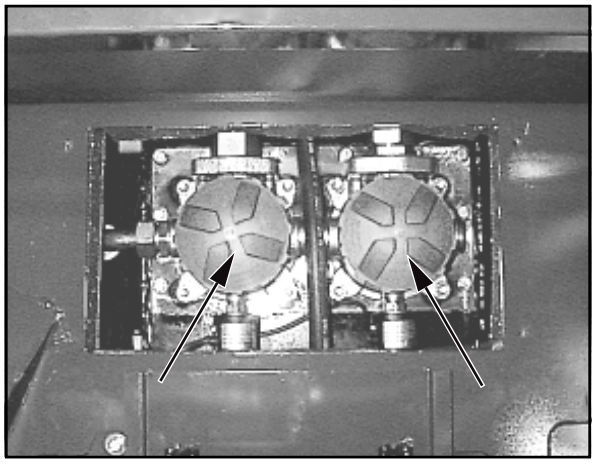

Figure 8-20

8.2.8 Maintaining/replacing the air filter

NOTE

Maintenance of the filter cartridge is necessary when either the red range is visible in the maintenance indicator (8-21/1) or after 12 months, whichever is sooner.

(1) Open the motor hood.

(2) Loosen the three spring-loaded catches on the air filter lid (8-21/2) and remove the air filter lid.

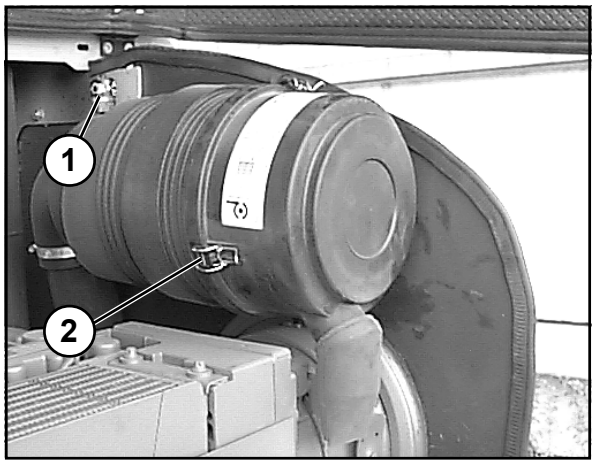

Figure 8-21

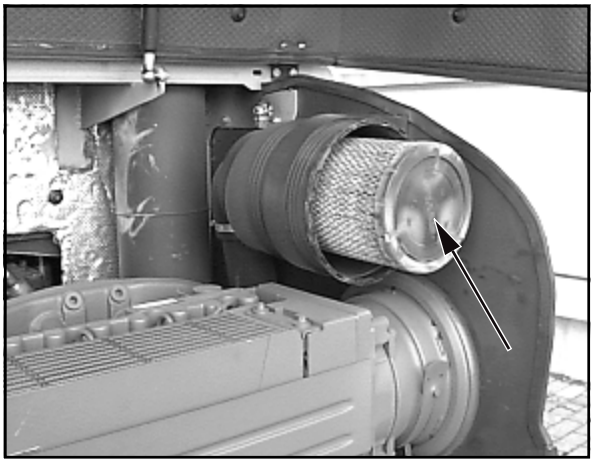

Figure 8-22

(3) Pull out the filter cartridge (8-22/arrow) by carefully turning it back and forth.
(4) Clean the filter cartridge.

CAUTION

- For cleaning, use a compressed air gun to which a pipe (angled at 90°) has been attached. The pipe must be sufficiently long to reach the bottom of the cartridge. Use dry compressed air of no more than 5 bar to blow out the cartridge by moving the pipe back and forth in the interior of the cartridge. Cleaning can be stopped when dust formation ceases.
- Do not use any petrol or hot fluids for cleaning.

(5) Use a hand-held lamp to check the cartridge paper and the rubber gasket of the filter cartridge for damage. If the cartridge or the gasket is damaged, replace the cartridge.
(6) Carefully insert the filter cartridge.
(7) Install the air filter lid on the filter housing in such a way that the direction arrow in the marking "**OBEN-TOP**" roughly points to half past one.

NOTE

The dust removal valve must be checked from time to time and cleaned if necessary.

(8) When the indicator field becomes red (8-21/1), push the reset button. The field becomes clear.

CAUTION

Check all connection pipes and hoses of the air filter system for damage before starting the engine.

8.2.9 Replacing the safety cartridge

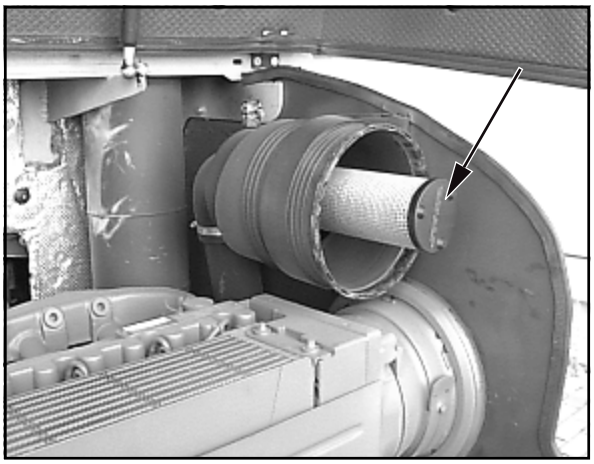

Figure 8-23

CAUTION

- The safety cartridge must not be cleaned.
- The safety cartridge must be replaced after the filter cartridge has been maintained/cleaned 5 times, but at the latest after two years.
- Make sure that no dirt or dust can enter the filter housing during replacement of the safety cartridge.

(1) Remove the filter cartridge (section 8.2.8).
(2) Pierce the seal of the safety cartridge (8-23/arrow) from the inside by using a screwdriver or similar tool and pull up both strips.
(3) Hold the safety cartridge by both strips and pull it out by carefully turning it back and forth. Replace the safety cartridge and the filter cartridge by new ones.
(4) The remaining installation is performed as described in section 8.2.8 (6)-(8).

8.2.10 Replacing the fuel filter

See the operating instructions for the engine.

8.2.11 Replacing the starter battery

NOTE

The starter battery is a maintenance-free part according to DIN 72311, section 7. It is located to the right in the motor compartment.

(1) Remove the main battery switch (4-10/7).
(2) Open the motor hood.
(3) Loosen and remove the fastening screw (size 17) (8-24/1) of the battery holder.
(4) Loosen and remove the connecting cables (8-24/2) from the batteries (size 13).

DANGER

Always remove the negative terminal first and then the positive terminal. Installation is in reverse order.

(5) Remove the battery and replace it.
(6) Apply grease to the terminals before fastening them.
(7) Installation is in reverse order.

DANGER

Make sure the fastenings are secure.

(8) Close the motor hood.

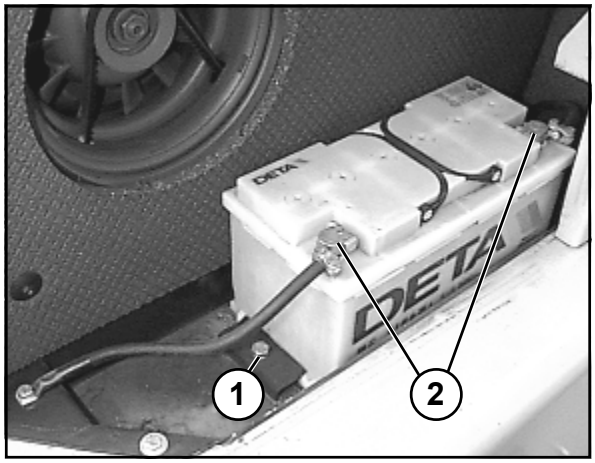

Figure 8-24

8.2.12 Maintaining/replacing the fresh air filter

(1) Lift and mechanically prop up the telescope arm [e.g. by inserting the telescope arm support (option) (1-1/ arrow)] and lower the telescope arm until it rests on the telescope arm support and swivel all the way to the left or right.
(2) Loosen the four fastening screws (size 10) (8-25/ arrows) of the heater cover and remove the cover.
(3) Remove the filter elements (8-26/arrows) and clean them with compressed air.

CAUTION

Do not use any petrol, hot fluids or industrial compressed air for cleaning.

(4) Check the filter elements for damage.

NOTE

The filter elements must be replaced when they are damaged or every **1500 operating hours**.

(5) Insert the filter elements and install the heater cover.

Figure 8-25

Figure 8-26

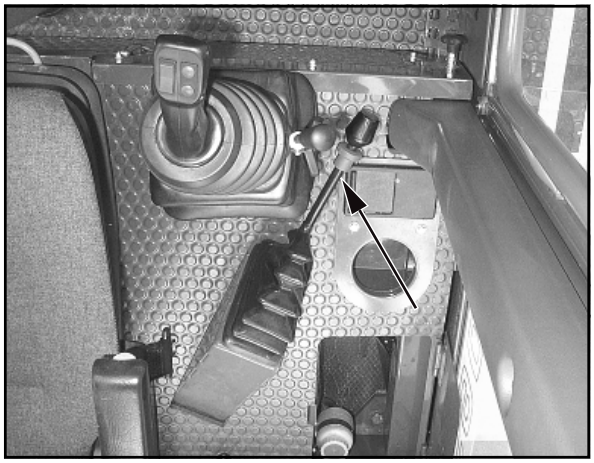

Figure 8-27

8.2.13 Checking/adjusting the parking brake play

DANGER

- All work on the brake system must be carried out by authorised personnel only.
- Oil loss (leaks) in the brake system must be immediately reported to authorized personnel.

(1) Check the brake's hydraulic oil level (4-10/8) and top up if necessary.

(2) Pull the parking brake lever (8-27/arrow) and release it again (lowest position).

CAUTION

The parking brake should become effective on the third catch.

If the path the parking brake lever must travel before the parking brake becomes effective is significantly longer, the following work must be carried out:

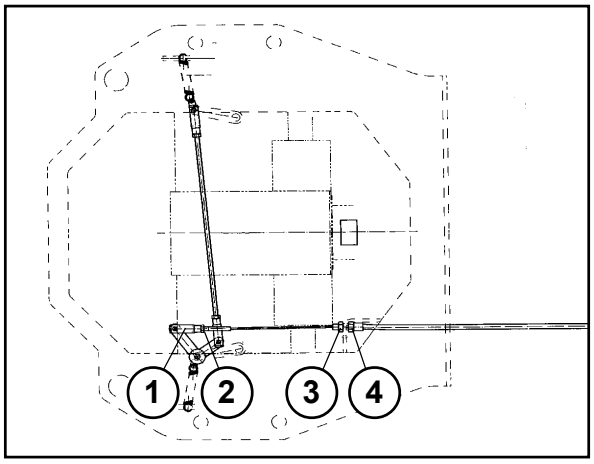

Figure 8-28

NOTE

Figure 8-28 shows a top view of the front axle/chassis area.

1st possibility of an adjustment:
(3) Loosen the adjusting screw on the cable (8-28/3) from the holder and turn it until the visible end of the thread is reached.

(4) Tighten the adjusting screw (8-28/4) until it touches the holder.

2nd possibility of an adjustment:
(5) Loosen the counter nut (8-28/2) at the steering head (8-28/1).

(6) Unhook the steering head and turn it in clockwise direction.

(7) Hook the steering head in again.

(8) Tighten the counter nut again.

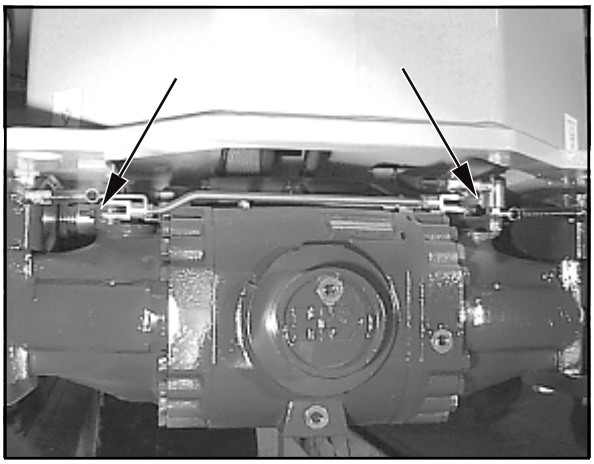

Figure 8-29

CAUTION

- While adjusting the leverage, make sure to check from time to time whether or not the parking brake becomes effective on the 3rd catch.
- The parallel leverage must make contact with the abutments (8-29/arrows) when the parking brake is released.

(9) Perform a function check.

8.3 Grease/oil lubrication points

- Item 8 of the maintenance plan.
- Marked in red on the loader.

8.3.1 Rear axle pivot bolts (8-30/arrows)

CAUTION

- The rear axle pivot bolt must be lubricated **every 50 operating hours**.
- Release the rear axle from load before lubricating the rear axle pivot bolts.

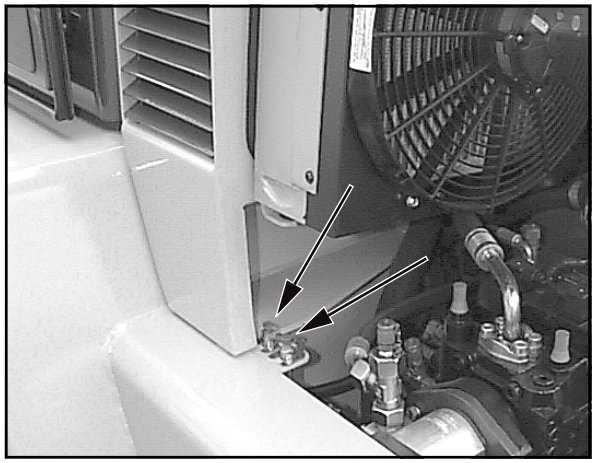

Figure 8-30

8.3.2 Rear axle (8-31/arrows)

CAUTION

The spindle bolts must be lubricated every **50 operating hours**.

NOTE

Lubricate the top and the bottom of the axle spindle bolts on both sides of the axle.

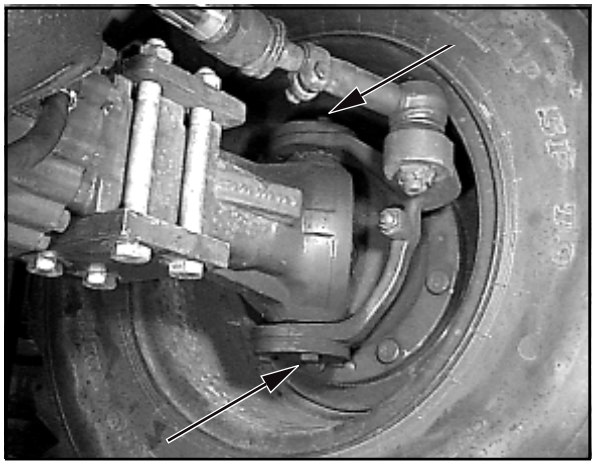

Figure 8-31

8.3.3 Front axle (8-32/arrows)

CAUTION

The spindle bolts must be lubricated every **50 operating hours**.

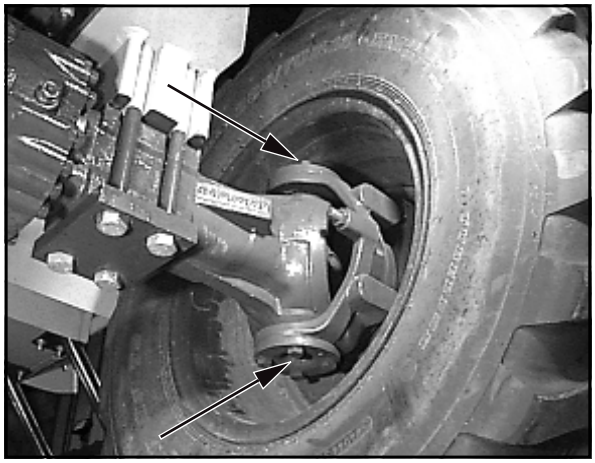

Figure 8-32

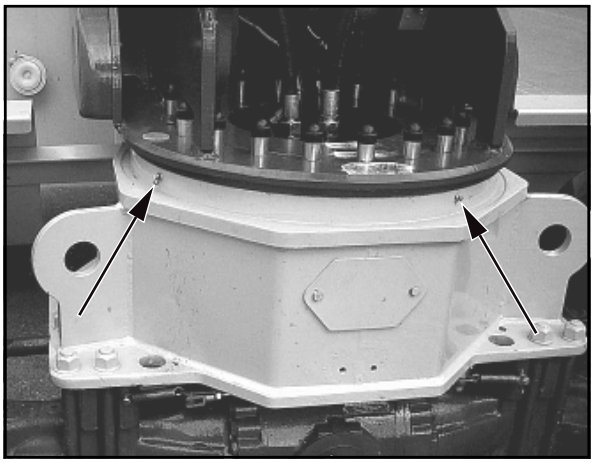

Figure 8-33

8.3.4 Ball bearing ring

The grease filling is to avoid friction, and to provide sealing and protection against corrosion. Therefore, the bearing must be lubricated **every 10 operating hours** until grease becomes visible on the outside. When lubricating the ball bearing ring, swivel the telescope arm by 20° at a time. Then lubricate all four grease nipples (8-33/arrows) in each position. It is absolutely necessary to lubricate the machine before and after a longer period of inactivity.

DANGER

- Before you start lubricating, mechanically support the telescope arm [e.g. by inserting the bucket arm support (optional) (1-1/arrow)], apply the parking brake (4-10/4) and set the drive direction switch (4-10/12) to the "0" position.
- **During** swivelling, no-one may be present in the swivel area of the telescope arm.

Figure 8-34

8.3.5 Wear liners on the telescope arm

NOTE

Lubricate the wear liners on the telescope arm every **10 operating hours** during the first **50 operating hours**, then after **250 operating hours**.

(1) Fully extend the telescope (4-10/11).
(2) Use a brush to apply grease on all four sides of the telescope (8-34/arrows).
(3) Retract and extend the telescope several times to evenly distribute the grease.
(4) Remove superfluous grease.

CAUTION

Use a higher grade multi-purpose grease in dusty environments.

Figure 8-35

8.3.6 Telescope arm

NOTE

The lubricating points of the telescope arm must be lubricated **every 50 operating hours**.

CAUTION

Grease every **10 operating hours** or at daily intervals in case of severe operating conditions, in dusty or wet environments.

- Swivel unit/telescope arm (8-35/arrow)

- Swivel unit/telescope arm (8-36/arrow)

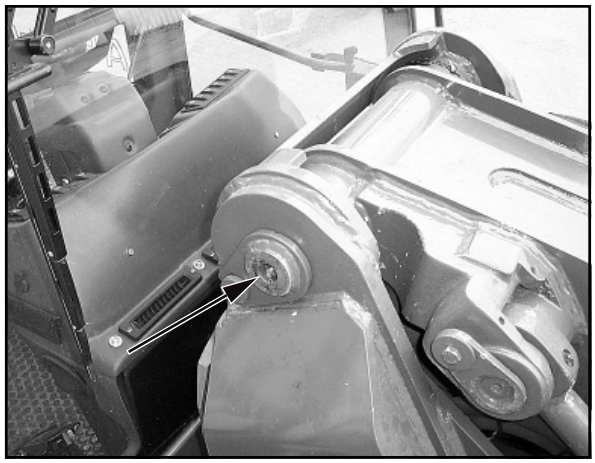

Figure 8-36

- Compensation cylinder bolt, plunger side (8-37/arrow)

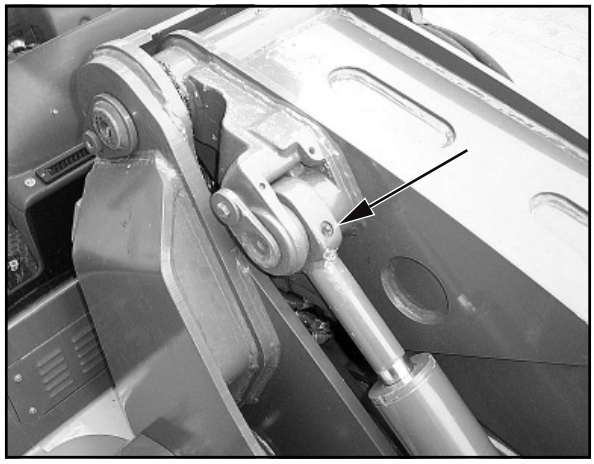

Figure 8-37

- Tip cylinder bolt, bottom side (8-38/arrow)

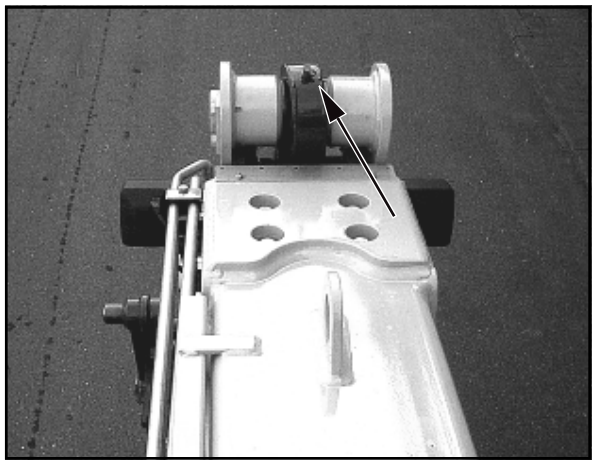

Figure 8-38

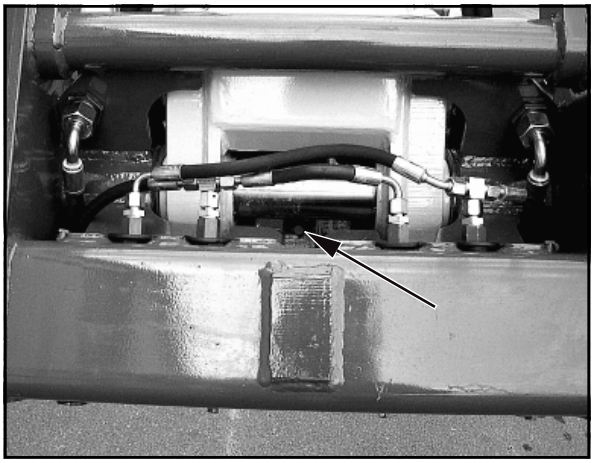

Figure 8-39

- Tip cylinder bolt, plunger side (8-39/arrow)

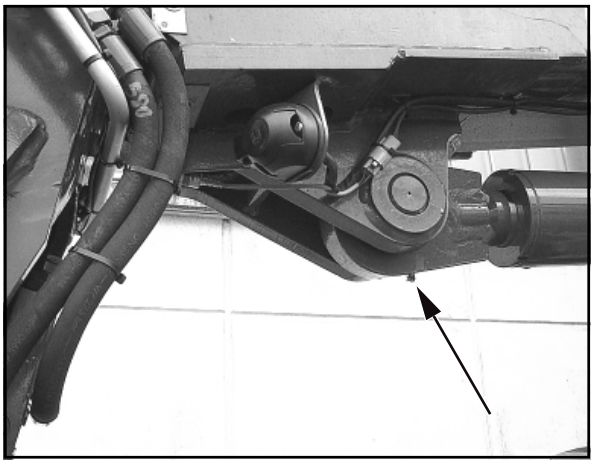

Figure 8-40

- Lift cylinder bolt, plunger side (8-40/arrow)

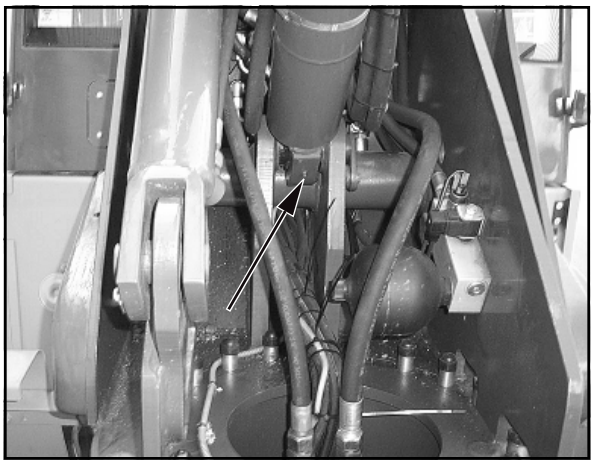

Figure 8-41

- Lift cylinder bolt, bottom side (8-41/arrow)

- Pivot arm bolt (8-42/1)
- Quick-change device bolt (8-42/2)
- Quick-change device release bolt (8-42/3)
- Pivot/pivot rod bolt (8-42/4)

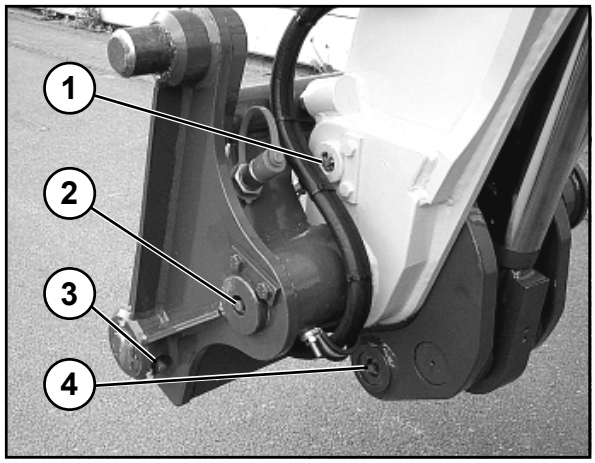

Figure 8-42

- Pivot arm bolt (8-43/1)
- Quick-change device bolt (8-43/2)
- Quick-change device release bolt (8-43/3)
- Pivot/pivot rod bolt (8-43/4)

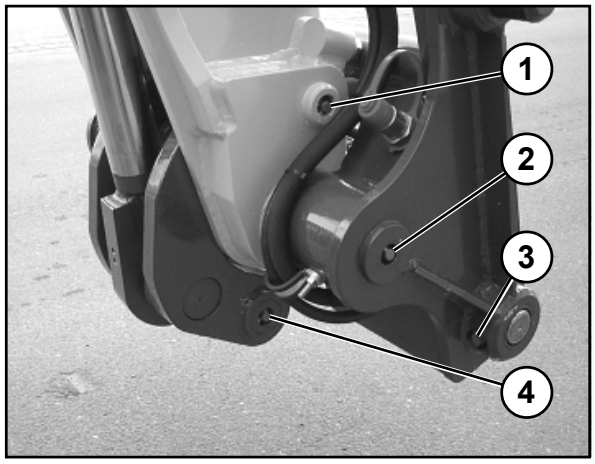

Figure 8-43

- Pivot rod bolt (8-44/arrows)

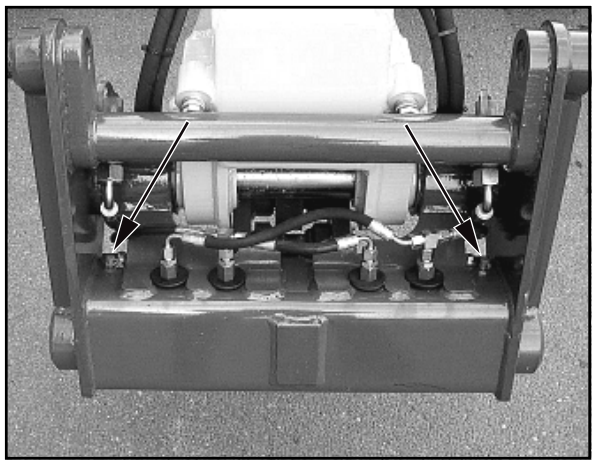
Figure 8-44

Figure 8-45

8.3.7 Driver's cabin door (8-45/arrows)

CAUTION

The hinges of the driver's cabin doors must be lubricated **every 50 operating hours**.

NOTE

Lubricate the hinges on both doors of the driver's cabin.

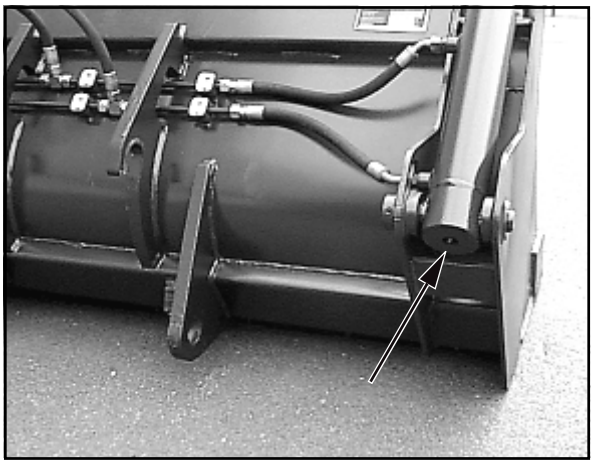

Figure 8-46

8.3.8 Multi-purpose bucket

CAUTION

The bearing bolts of the multi-purpose bucket must be lubricated **every 10 operating hours**.

NOTE

- The bolt (8-46/arrow) must be lubricated on both sides of the multi-purpose bucket.

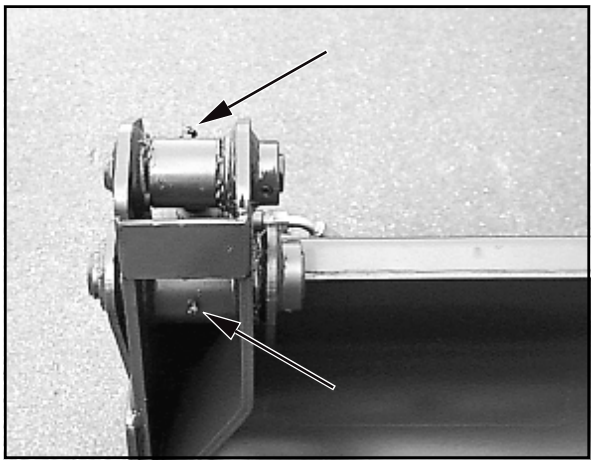

Figure 8-47

- The bolts (8-47/arrows) must be lubricated on both sides of the multi-purpose bucket.

8.3.9 Oil lubrication points

8.3.9.1 Parking brake

CAUTION

Use engine oil to lubricate the joints and pivot levers **every 50 operating hours** (8-48/arrows).

NOTE

Figure 8-48 shows a top view of the front axle/chassis area.

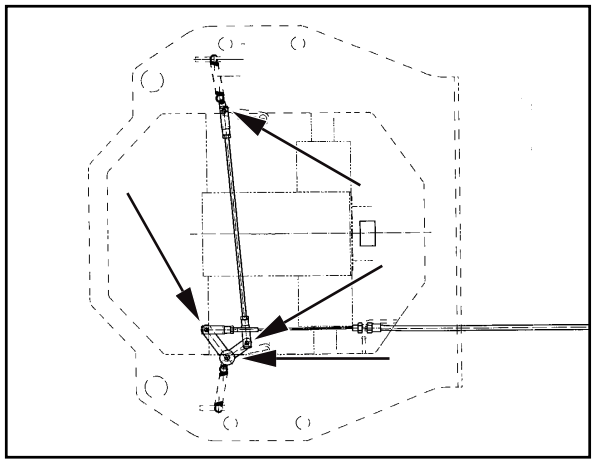

Figure 8-48

8.3.9.2 Supporting valve actuator (8-49/arrow)

CAUTION

The leverage of the supporting valve actuator must be lubricated with engine oil **every 50 operating hours**.

NOTE

Lubricate only the visible surface of the spring housing piston rod.

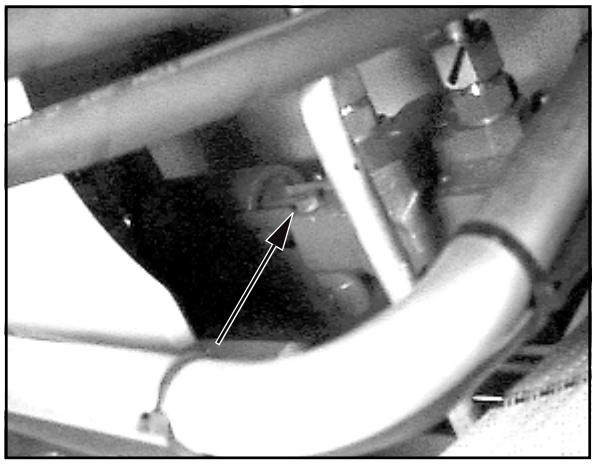

Figure 8-49

Faults, causes and remedies

9 Faults, causes and remedies

NOTE

*) Faults may be eliminated only by authorised personnel

Fault	Probable cause	Remedy
Engine		See the operating instructions for the engine
Engine does not start.	Drive switch (4-10/12) is not in neutral position	Set the drive switch to the neutral position
The telescope arm cannot be lifted/lowered	Pressure-relief valve in servo valve is open	Remove and clean entire pressure-relief valve, readjust*
	Pilot valve for working hydraulics (4-10/9) is locked	Unlock pilot valve (1-2/arrow)
	Pilot pressure too low or does not exist	Open, clean and readjust pressure-relief valve in control line *
	Diesel engine failed	Spring force can be used to bring the telescope arm to its lowermost position immediately after an engine failure. » Does not apply when pipe break protection is installed «
Steering is sluggish	Pressure-relief valve in steering unit is open	Remove and clean entire pressure-relief valve, readjust*
	Slide in priority valve stuck	Replace priority valve *
Swivel unit does not swivel	Blocking wedge blocks swivelling (1-4/arrow)	Remove blocking wedge and store in holder
	Pressure-relief valve in servo valve is open	Remove and clean entire pressure-relief valve, readjust*
Support fails	Switching of stop valve in frame under revolving seat stuck	Bring telescope arm into travel direction; free off leverage
The support fails when the telescope arm is lowered in a swivelled state	Non-return valve in pressure line stuck in open position	Bring telescope arm into travel direction, remove and clean non-return valve (replace if necessary) *

Fault	Probable cause	Remedy
Faults in the driving and working hydraulics	Clogged filter	Replace filter cartridges
	Lack of oil in hydraulic oil reservoir	Top off oil
	Electrical connection at axial piston pump are not tight, are not connected or are oxidised	Establish or clean connections according to electric wiring diagram
	High-pressure valves soiled	Clean the high-pressure valves
Faults in the braking system	Parking brake does not hold the device	Check setting, adjust if necessary *
		Check whether electrical traction drive break is connected to brake lever
Alternator does not charge	Loose connection	Press in and lock connection
	V-belt torn	Replace V-belt
	Alternator speed too low	Check V-belt tension, tighten if necessary
Heater and ventilation system failed	Fuse in fuse box blown	Replace fuse
Hose couplings of attachments cannot be connected	Increased pressure due to heating of the attachment	**Carefully** loosen the screwed connection on the end of the hose using the quick-change couplings. Oil squirts out and the increased pressure is eliminated. Tighten the screwed connection. **NOTE** Waste oil must be disposed of in such a way that it will not cause pollution!
	Increased pressure in basic machine	Turn off the engine and eliminate pressure from the lines by repeatedly moving the pilot valve for the auxiliary hydraulics (4-10/2) to and fro.

Wiring diagrams

10.1 - 10.08 Elektrik-Schaltplan/Schéma électrique/Wiring diagramm/Elektrisch schakelschema/Elektriskt kopplingsschema

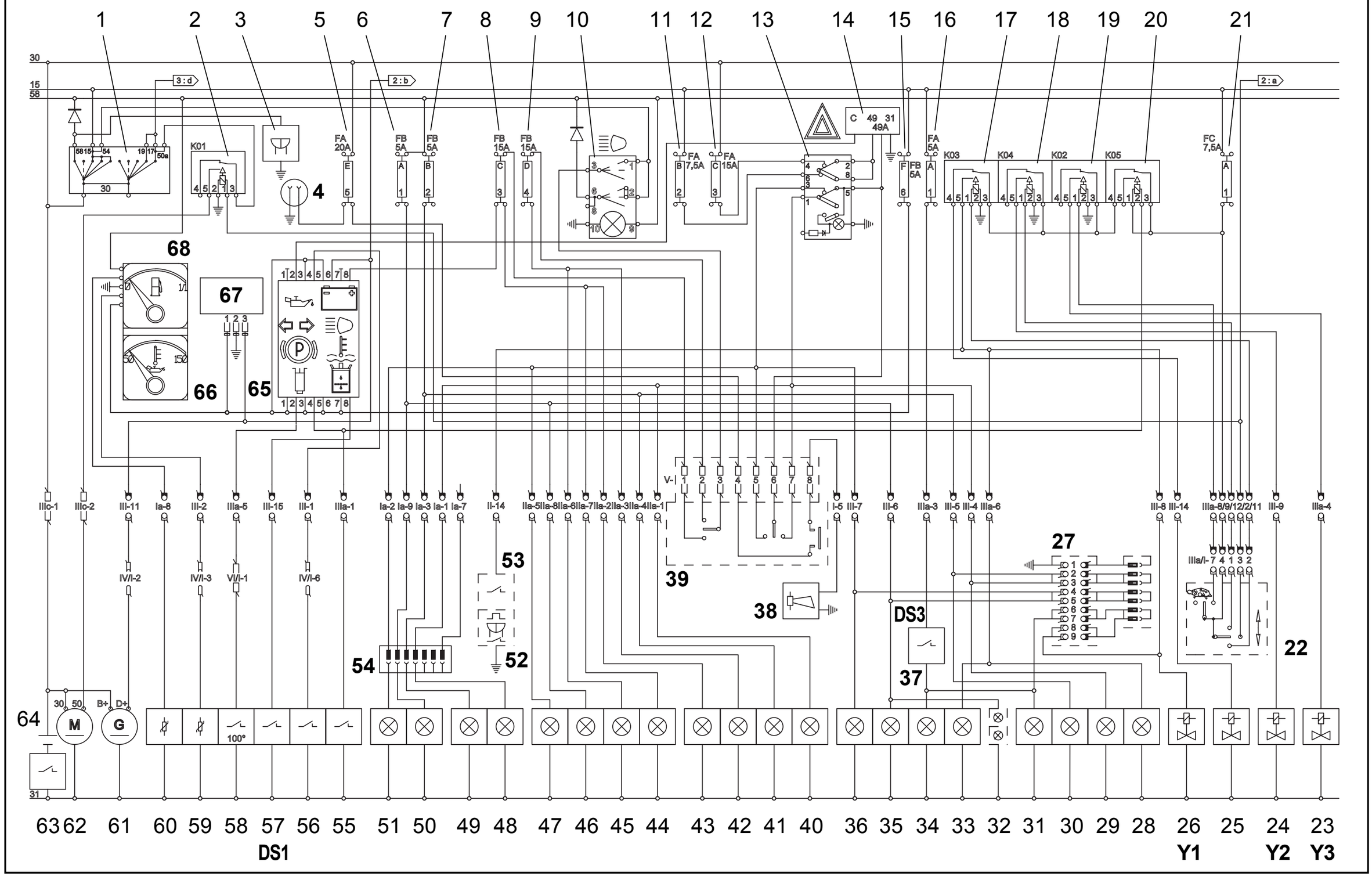

10.1 - 05.03 Elektrik-Schaltplan/Schéma électrique/Wiring diagramm/Elektrisch schakelschema/Elektriskt kopplingsschema

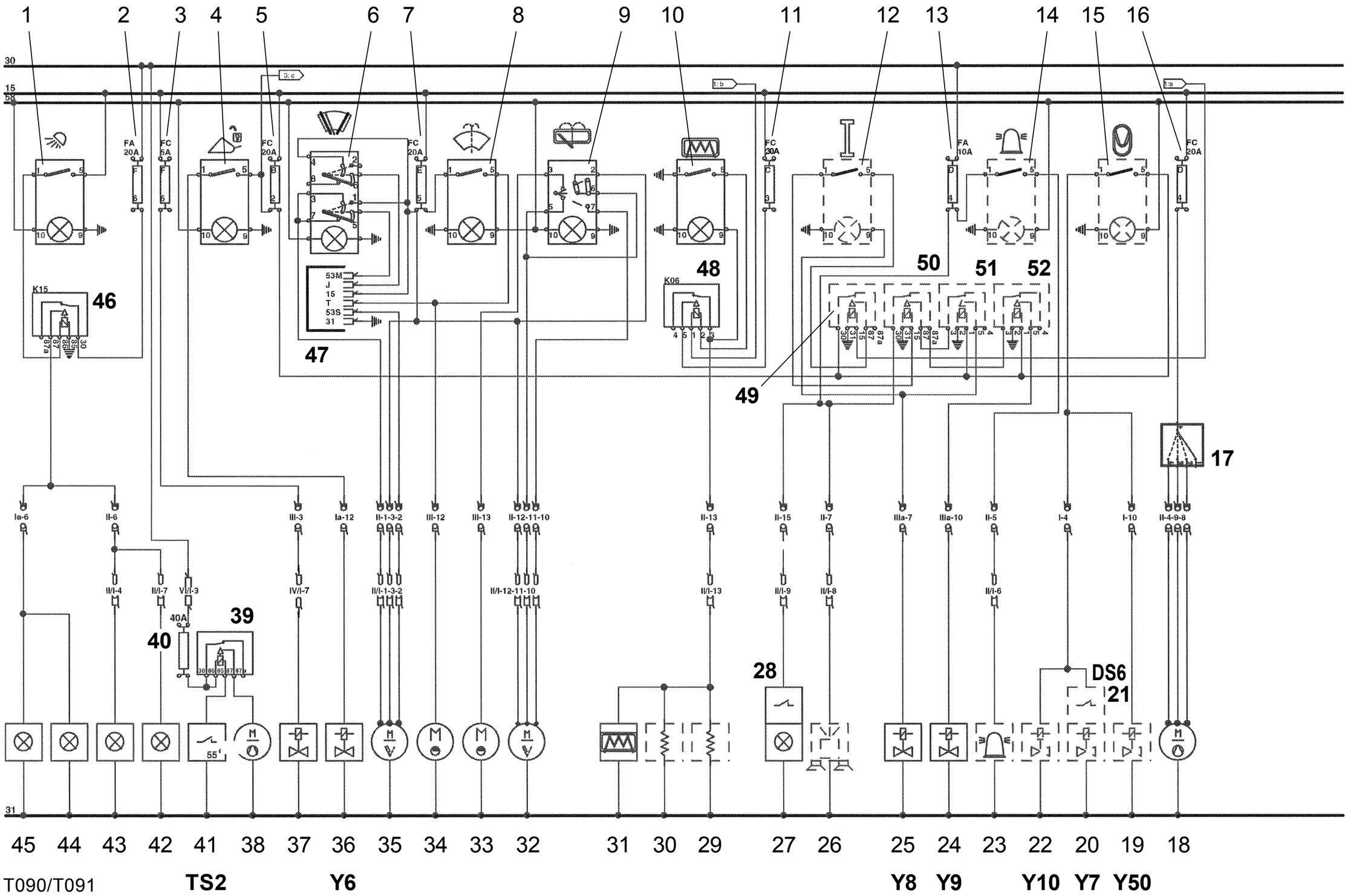

10.1 - 10.08 Elektrik-Schaltplan/Schéma électrique/Wiring diagramm/Elektrisch schakelschema/Elektriskt kopplingsschema

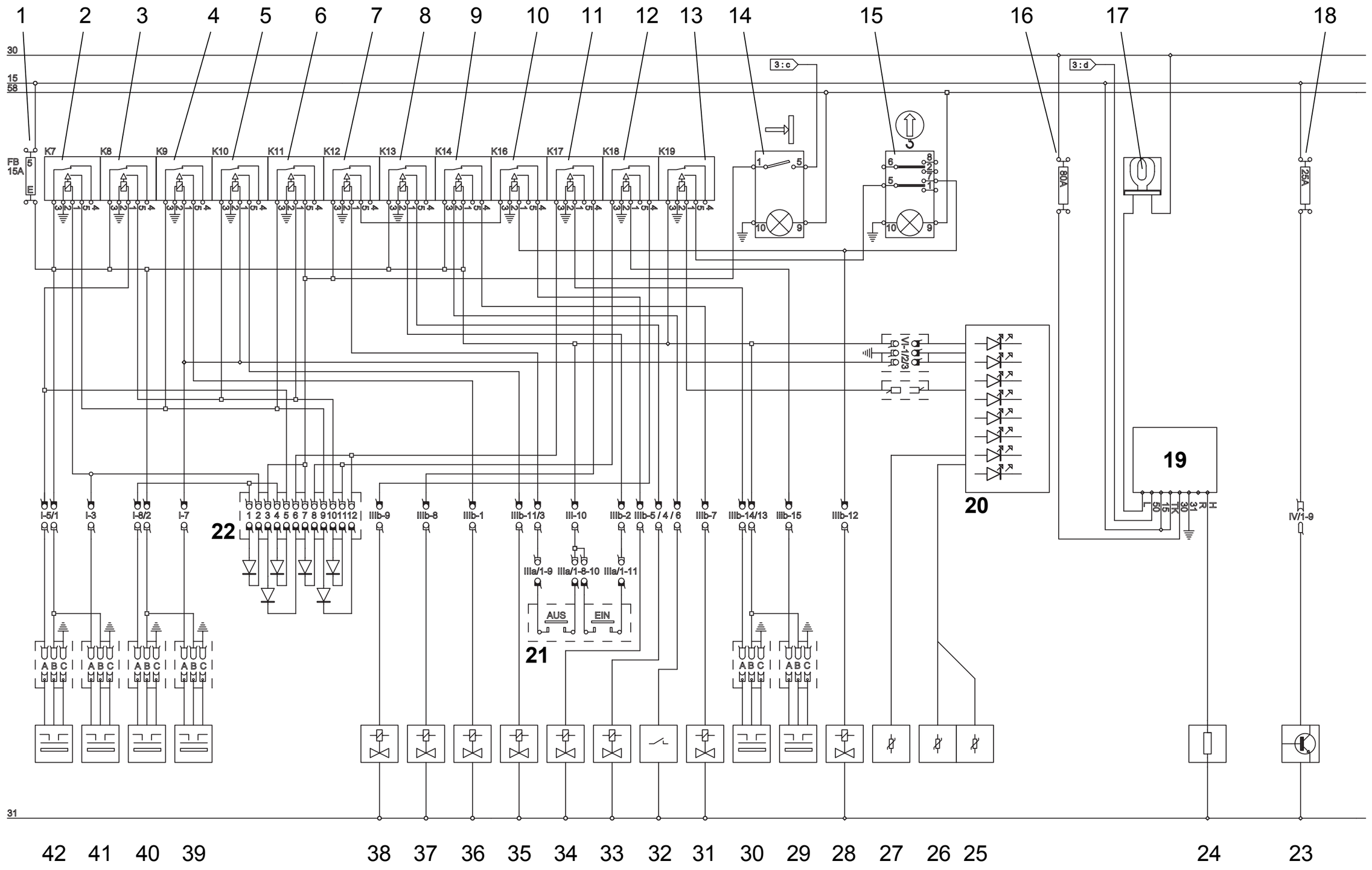

10.1 Electric wiring diagram

Sheet/ Item	Designation
1-3/01	Start switch
1-3/02	Starter interlock relay (K01)
1-3/03	Parking light buzzer
1-3/04	Dashboard socket
1-3/05	Fuse (socket, signal horn)
1-3/06	Fuse (right parking light, left tail light)
1-3/07	Fuse (left parking light, right tail light)
1-3/08	Fuse (high beam)
1-3/09	Fuse (low beam)
1-3/10	Actuator for road lights
1-3/11	Fuse (turn signal)
1-3/12	Fuse (hazard flasher)
1-3/13	Actuator for hazard flasher
1-3/14	Turn signal relay
1-3/15	Fuse (instrument lighting)
1-3/16	Fuse (brake light)
1-3/17	Relay for power adaptation, reverse (K03)
1-3/18	Relay for power adaptation, forward (K04)
1-3/19	Relay for power adaptation, fast/slow (K02)
1-3/20	Traction drive cut-out relay (K05)
1-3/21	Fuse (traction drive)
1-3/22	Actuator Drive stages fast/slow Travel direction forward/reverse
1-3/23	Fast/slow speed valve
1-3/24	Valve, forward drive direction
1-3/25	Direction detection valve (only for fast loaders)
1-3/26	Valve, reverse drive direction
1-3/27	Rear socket
1-3/28	Reversing light, right
1-3/29	Turn signal, rear right
1-3/30	Tail light, right
1-3/31	Brake light, right
1-3/32	License plate illumination (option)
1-3/33	Reversing light, left
1-3/34	Brake light, left
1-3/35	Tail light, left
1-3/36	Turn signal, rear left
1-3/37	Brake light switch
1-3/38	Signal horn
1-3/39	Steering column switch
1-3/40	Turn signal, front right
1-3/41	Parking light, right
1-3/42	Low beam, right
1-3/43	High beam, right
1-3/44	High beam, left
1-3/45	Low beam, left
1-3/46	Parking light, left
1-3/47	Turn signal, front left

Bucket protection:

1-3/48	Turn signal, right
1-3/49	Side lamp, right
1-3/50	Side lamp, left
1-3/51	Turn signal, left

Sheet/ Item	Designation
1-3/52	Reversing warning buzzer (option)
1-3/53	Reversing warning buzzer switch (option)
1-3/54	7-pole socket
1-3/55	Parking brake switch
1-3/56	Engine oil pressure switch
1-3/57	Hydraulic oil filter switch
1-3/58	Hydraulic oil temperature switch, 110°
1-3/59	Motor oil temperature sensor
1-3/60	Dip pipe sensor
1-3/61	Alternator
1-3/62	Starter
1-3/63	Battery main switch
1-3/64	Battery
1-3/65	Control lamp assembly
1-3/66	Engine oil temperature gauge
1-3/67	Operating hours meter
1-3/68	Fuel gauge

Sheet/Item	Designation
2-3/01	Actuator, working lights
2-3/02	Fuse (working lights)
2-3/03	Fuse (engine shut-off)
2-3/04	Actuator for quick-change device release
2-3/05	Fuse (hydraulics)
2-3/06	Actuator for interval windshield wiper, front
2-3/07	Fuse (window wiper/washer)
2-3/08	Actuator for windshield washer, front
2-3/09	Actuator for window wiper/washer, rear
2-3/10	Actuator for rear window heater
2-3/11	Fuse (rear window heater)
2-3/12	Actuator for gear shift (only for fast loaders)
2-3/13	Fuse (warning beacon, radio, interior lighting)
2-3/14	Actuator for warning beacon (option)
2-3/15	Actuator for lifting device suspension (option)
2-3/16	Fuse (fan/blower)
2-3/17	Actuator for fan/blower
2-3/18	Heater fan motor
2-3/19	Combination valve: pipe break protection / lifting device suspension (option)
2-3/20	Memory valve, lifting device suspension (option)
2-3/21	Pressure switch, lifting device suspension (option)
2-3/22	Reservoir valve, lifting device suspension (option)
2-3/23	Warning beacon (option)
2-3/24	Valve for 2nd gear (only for fast loaders)
2-3/25	Valve for 1st gear (only for fast loaders)
2-3/26	Radio (option)
2-3/27	Interior lighting
2-3/28	Interior lighting switch
2-3/29	Heatable outside mirror, right (option)
2-3/30	Heatable outside mirror, left (option)
2-3/31	Rear window heater
2-3/32	Wiper motor, rear
2-3/33	Window washer motor, rear
2-3/34	Window washer motor, front
2-3/35	Wiper motor, front
2-3/36	Quick-change device release valve
2-3/37	Engine shut-off valve
2-3/38	Oil cooler fan motor
2-3/39	Relay (oil cooler)
2-3/40	Fuse (oil cooler)
2-3/41	Oil cooler thermostat 55°
2-3/42	Working lights, rear left
2-3/43	Working lights, rear right
2-3/44	Working lights, front left
2-3/45	Working lights, front right
2-3/46	Relay for working lights (K15)
2-3/47	Interval timer
2-3/48	Rear window heater relay (K06)
2-3/49	Timer for gear shift (only for fast loaders)
2-3/50	Impulse relay for gear shift (only for fast loaders)
2-3/51	Relay for gear shift (only for fast loaders)
2-3/52	Relay for gear shift (only for fast loaders)

Sheet/Item	Designation
3-3/01	Fuse (telescope function)
3-3/02	Relay, swivel (30°) left (K07)
3-3/03	Relay, swivel (30°) right (K08)
3-3/04	Relay, rear axle interlock right (K09)
3-3/05	Relay, rear axle interlock left (K10)
3-3/06	Relay, linkage right/left (K11)
3-3/07	Relay, extend telescope (K12)
3-3/08	Relay, retract telescope (K13)
3-3/09	Relay, idle speed control (K14)
3-3/10	Relay, overload (K16)
3-3/11	Relay, swivel (90°) left (K17)
3-3/12	Relay, swivel (90°) right (K18)
3-3/13	Relay alarm output (overload warning device)
3-3/14	Actuator for swivel restriction bypass (more than 30°)
3-3/15	Actuator for overload cut-off
3-3/16	Fuse (glow start controller)
3-3/17	Indicator for glow start system
3-3/18	Fuse (exhaust gas recirculation)
3-3/19	Glow start controller
3-3/20	Overload indicator display (option)
3-3/21	Multifunction lever right (retract/extend)
3-3/22	Diode assembly
3-3/23	Exhaust gas recirculation
3-3/24	Glow plug
3-3/25	Length transmitter
3-3/26	Angle transmitter
3-3/27	Pressure sensor
3-3/28	Valve overload warning device (option)
3-3/29	Proximity switch, swivel cut-off (90°) right
3-3/30	Proximity switch, swivel cut-off (90°) left
3-3/31	Valve, idle speed control
3-3/32	Switch, idle speed control
3-3/33	Valve, retract telescope
3-3/34	Valve, extend telescope
3-3/35	Valve, rear axle interlock left
3-3/36	Valve, rear axle interlock right
3-3/37	Valve, swivel release, left
3-3/38	Valve, swivel release, right
3-3/39	Proximity switch, rear axle interlock
3-3/40	Proximity switch, telescope retracted
3-3/41	Proximity switch, swivel right
3-3/42	Proximity switch, swivel left

option = optional equipment

NOTE

The bold numbers next to the item numbers in the electric wiring diagram are cross-references to the respective part in the hydraulic diagram.

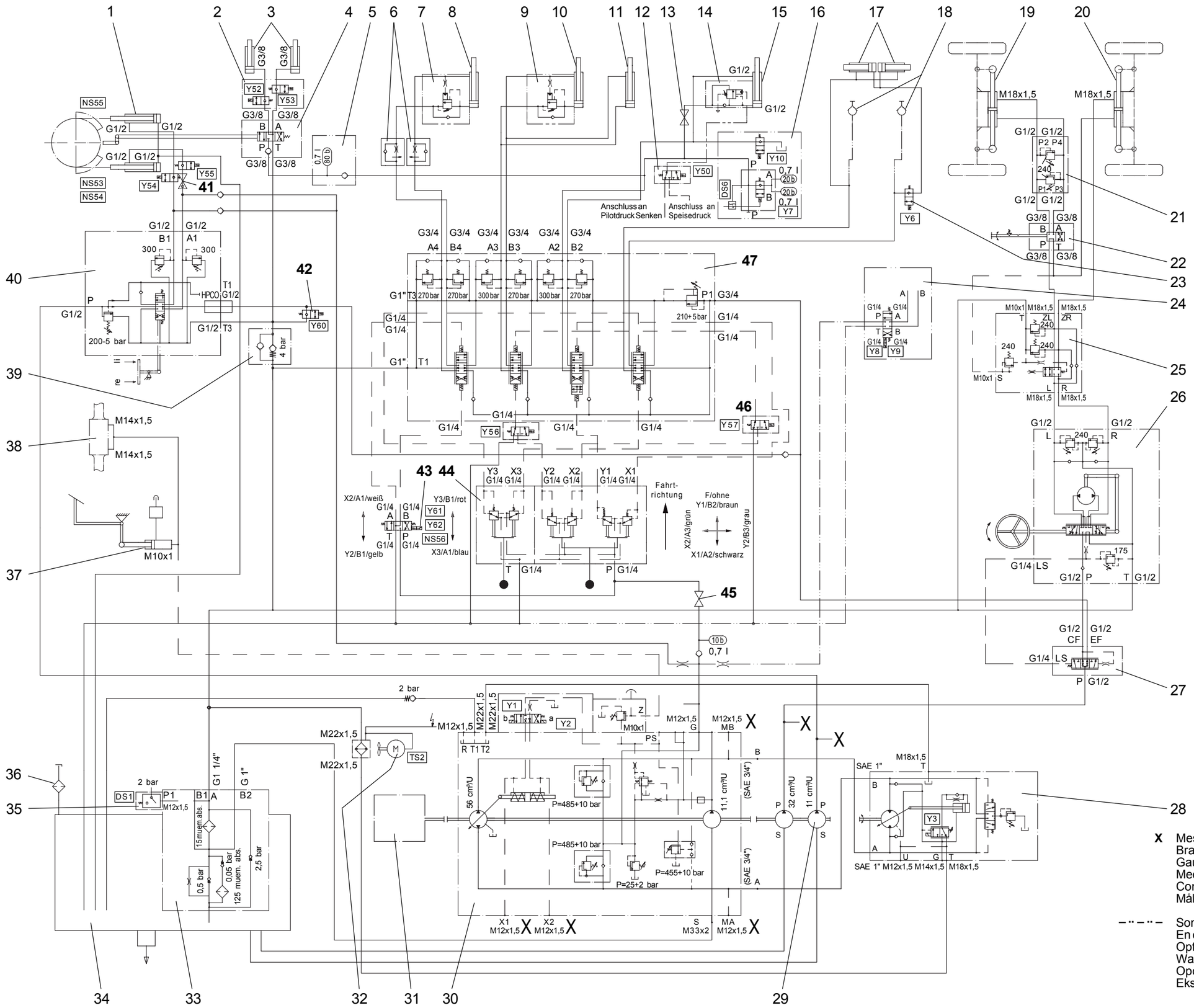

X Messanschluss
Branchement de mesure
Gauge part
Meetaansluiting
Conexión de medición
Måleuttak

– ·· – ·· – Sonderausstattung
En option
Optional equipment
Wardt niet standaard geleverd
Opción
Ekstrautstyr

10.2 Hydraulic circuit diagram

Item Designation

01 Swivel cylinder DW 100/50/620/960
02 Leakage-free rear axle interlock
03 Supporting cylinder EW 50/145/438
04 Supporting valve
05 Reservoir system, pipe break protection
06 Flow rate restrictor
07 Pipe break protection, telescope cylinder
08 Telescope cylinder DW 80/50/1050/1770
09 Pipe break protection, tip cylinder
10 Tip cylinder DW 110/70/456/871
11 Compensation cylinder DW 80/45/350/800
12 Combination valve: pipe break protection / lifting device suspension
13 Choke (lift, lower)
14 Pipe break protection, lift cylinder
15 Lift cylinder DW 110/70/815/1465
16 Lifting device suspension
17 Locking cylinder DW 40/25/40/167
18 Auxiliary hydraulics, 1st circuit
19 Steering cylinder, front
20 Steering cylinder, rear
21 Double shock valve
22 Steering switching valve
23 Electric interlock for quick-change device
24 Gear shift (fast loader)
25 Blocking valve
26 Steering unit, 200/100 cm³/rev.
27 Priority valve
28 Drive motor A6VM 107 HA
29 Gear-type pump (32 + 11) cm³/rev.
30 Drive pump A4VG 56 DA
31 Drive motor KHD TD 2011L04I
32 Hydraulic oil cooler with electric fan
33 Combined suction and return flow filter
34 Hydraulic oil tank
35 Electric contamination indicator
36 Filling/ventilation filter
37 Stepped main brake cylinder
38 Lamella brake
39 Servo pressure valve
40 1-way valve
41 Choke (swivel)
42 Idle speed control
43 Pilot valve for telescope cylinder
44 Control pressure transmitter
45 Shut-off valve, working hydraulics
46 Hydraulic tilt limiter
47 4-way valve

NOTE

The item numbers in the hydraulic diagram are cross-references to the respective interface in the electric wiring diagram.

Technical data (loader)

11 Technical data

NOTE

The technical data refer to 16/70-20 tyres.

11.1 Loader

- Height	2770 mm
- Width	2030 mm
- Wheelbase	2050 mm
- Track width	1680 mm
- Operating weight w/o attachment	6860 kg
- Ground clearance	
- Differential	370 mm
- Turning radius (across the rear)	4215 mm
- Steering angle	+/- 33 °
- Swinging angle	+/- 10 °
- Embankment angle	29 °
- Climbing ability with payload	60 %
- Perm. towed load at max. drawbar load of 100 kg	
- braked	3500 kg
- unbraked	750 kg
- Max. lifting capacity	34 kN
- Max. thrust force	42.8 kN

11.2 Engine

- Oil/air cooled diesel engine	
- 4 cylinders, 4-stroke, direct injection	
- Displacement	3109 cm³
- Performance acc. to ISO 9249	56.5 kW at 2500 rpm
- Exhaust emission according to RL 97/68 EC, level 3 + TIER	

11.3 Starter

- 2.2 kW, 12 V

11.4 Alternator

- 80 A, 14 V

11.5 Hydrostatic drive motor

“20 km/h” variant

- Drive stage I	0.....6 km/h
- Drive stage II	0.....20 km/h

“30 km/h” variant

1st gear

- Drive stage I	0.....6 km/h
- Drive stage II	0.....17 km/h

2nd gear

- Drive stage I	0...10.5 km/h
- Drive stage II	0.....30 km/h

“35 km/h” variant

1st gear

- Drive stage I	0.....6 km/h
- Drive stage II	0.....17 km/h

2nd gear

- Drive stage I	0...10.5 km/h
- Drive stage II	0.....35 km/h

11.6 Axle loads

- Perm. axle loads acc. to StVZO	
- front	4500 kg
- rear	4500 kg
- Perm. total weight acc. to StVZO	7300 kg

11.7 Tyres

The following tyres are permitted:

- Size		16/70 - 20
- Tyre pressure	- front	3.5 bar
	- rear	2.2 bar
- Size		400/70 - 20
- Tyre pressure	- front	3.5 bar
	- rear	2.5 bar
- Size		405/70 R 20
- Tyre pressure	- front	3.8 bar
	- rear	2.5 bar

11.8 Steering system

- Four-wheel (can be switched to rear-wheel steering)
- Hydrostatic via priority valve

- Pressure	max. 170 bar

11.9 Brake system

- hydrostatic service brake (front axle: wet lamella brake). Acting as inching brake in the first pedal actuation stage.
- Parking brake/auxiliary brake system: Wet lamella brake in the front axle.

11.10 Electrical system

- Battery	88 Ah

11.11 Hydraulic system

- Contents	130 l
- Hydraulic oil reservoir	86 l
- Flow rate	82.5 + 27.5 l/min
- Operating pressure	max. 200 bar
- 1 lift cylinders	Ø 110 mm
- 1 tip cylinders	Ø 110 mm
- 1 telescope cylinder	Ø 80 mm
- 1 compensation cylinder	Ø 80 mm
- Times acc. to DIN ISO 7131	
Lift (with payload)	5.3 s
Lower (without load)	2.8 s
Dump 45°	1.5 s
Tilt 45°	1.5 s
Retract telescope	2.1 s
Extend telescope	3.4 s

11.11.1 Swivel unit

- Flow rate	27.5 l/min
- Operating pressure	max. 200 bar
- 2 swivel cylinders	Ø 100 mm
- Time to swivel 90°	4.9 s

11.11.2 Support system

- Operating pressure	depending on load
- 2 support cylinders, plunger diameter	50 mm

11.12 Fuel supply system

- Fuel tank contents	75.0 l

11.13 Heater and ventilation system

- Oil heater	COBO
- Type	2/9008/COMB-10/A45
- 3-stage heater	Q_{80} max. 10.5 kW at $\mathring{V}_{oil}$ 30 l/min
- 3-stage blower	max. 785 m³/h

11.14 Full flow suction filter

- Filter mesh	10 µm nom.
- Bypass response pressure	Δp = 0.25 bar

11.15 Electric contamination indicator

- Switch-on pressure	Δp = 0.15 bar

11.16 Oil cooler with temperature-controlled fan

- Performance	max. 17 kW
- Flow rate	28 l/min

11.17 Noise emission

“20 km/h” variant

Sound power level (LWA) Noise outside:	101 dB(A)
Acoustic power level (LWA) Noise in the driver’s cabin:	77 dB(A)

“30 km/h” variant

Sound power level (LWA) Noise outside:	101 dB(A)
Acoustic power level (LWA) Noise in the driver’s cabin:	77 dB(A)

“35 km/h” variant

Sound power level (LWA) Noise outside:	dB(A)
Acoustic power level (LWA) Noise in the driver’s cabin:	dB(A)

Technical data (attachments)

12 Attachments

NOTE

- The technical data refer to 16/70-20 tyres.

12.1 Buckets

- Dimensions acc. to ISO 7131/35

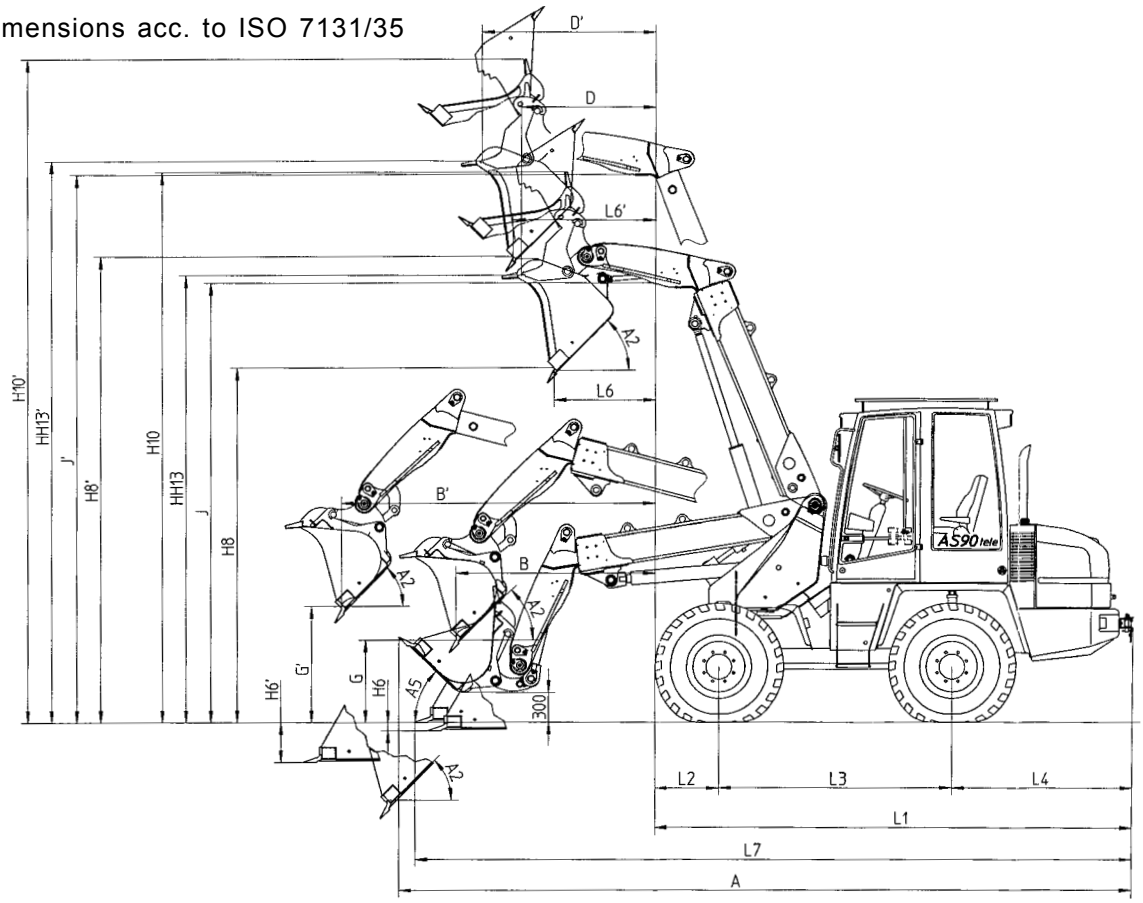

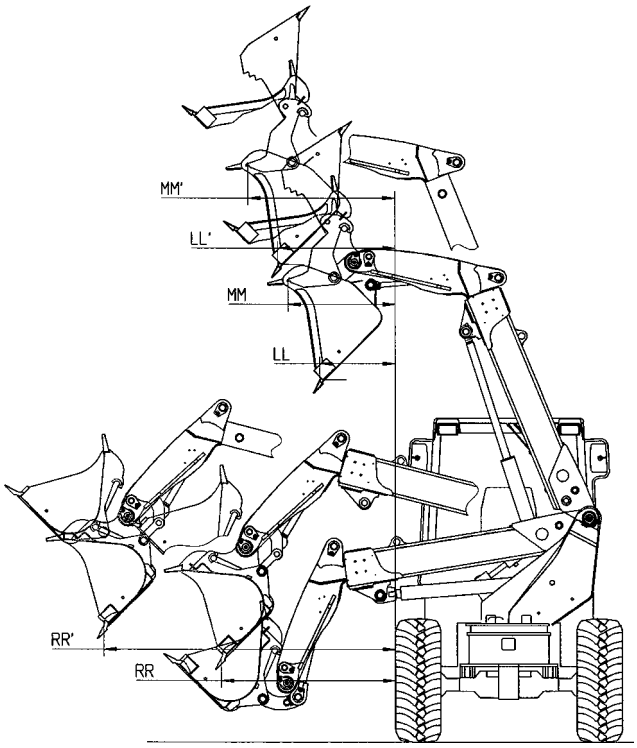

12.1 Buckets

Bucket type			Standard bucket	Lightweight bucket	Multi-purpose bucket
A	Total length	mm	6450	6095	6520
AA4	Max. dump angle	°	105	105	105
A2	Dump angle	°	45	45	45
A5	Max. tilt angle	°	45	45	45
B	Max. dumping distance at dumping angle 45°	mm	1745	1960	1860
B'	Max. dumping distance at dumping angle 45°	mm	2760	2970	2880
G	Dumping height at max. dumping distance and dumping angle 45°	mm	775	680	700
G'	Dumping height at max. dumping distance and dumping angle 45°	mm	1060	930	960
H6	Depth of feed-in	mm	145	110	150
H6'	Depth of feed-in	mm	350	300	280
H8	Dumping height at max. lifting height and dumping angle 45°	mm	3105	3100	3160
H8'	Dumping height at max. lifting height and dumping angle 45°	mm	4115	4100	4150
H10	Max. working height	mm	4845		4645
H10'	Max. working height	mm	5835		5630
J	Free lift height	mm	3835	3835	3835
J'	Free lift height	mm	4830	4830	4830
LL	Dumping distance at max. lifting height and dumping angle 45°	mm	645	795	715
LL'	Dumping distance at max. lifting height and dumping angle 45°	mm	1005	1155	1075
L1	Length	mm	4200		
L2	Length	mm	560		
L3	Length	mm	2050		
L4	Length	mm	1595		
L6	Dumping distance at max. lifting height and dumping angle 45°	mm	870	940	850
L6'	Dumping distance at max. lifting height and dumping angle 45°	mm	1250	1310	1220
L7	Total length	mm	6355	6100	6460
RR	Max. dumping distance at dumping angle 45°	mm	1495	1625	1565
RR'	Max. dumping distance at dumping angle 45°	mm	2505	2635	2575
Multipurpose bucket opened:					
D	Dumping distance at max. lifting height and tilted bucket	mm	-	-	1210
D'	Dumping distance at max. lifting height and tilted bucket	mm	-	-	1515
HH13	Max. dumping height with tilted bucket	mm	-	-	3960
HH13'	Max. dumping height with tilted bucket	mm	-	-	4950
MM	Dumping distance at max. lifting height and tilted bucket	mm	-	-	915
MM	Dumping distance at max. lifting height and tilted bucket	mm	-	-	1260

NOTE

- The code letters given **without** inverted comma (e.g. **B**) are values with the telescope **retracted**.
- The code letters given **with** inverted comma (e.g. **B'**) are values with the telescope **extended**.

12.1 Buckets

Bucket type		Standard bucket	Lightweight bucket	Multi-purpose bucket
Bucket volume acc. to DIN ISO 7546	m³	**0.9**	**1.2**	**0.8**
Bucket width	mm	2100	2000	2100
Weight	kg	288	378	493
Loads acc. to ISO 14397				
Bulk density	t/m³	1.6	1.2	1.7
Dump load (telescope retracted)				
- frontal	kg	2950	2880	2780
- swivelled	kg	2320	2250	2140
Payload (telescope retracted) *1				
- frontal	kg	1475	1440	1390
- swivelled	kg	1160	1125	1070
Dump load (telescope extended)				
- frontal	kg	1850	1790	1720
- swivelled	kg	1160	1110	1050
Payload (telescope extended) *1				
- frontal	kg	925	895	860
- swivelled	kg	580	555	525
Loads acc. to ISO 8313				
Bulk density	t/m³	1.6		
Dump load (telescope retracted) *2				
- frontal	kg	2850		
- swivelled	kg	2050		
Dump load (telescope extended)				
- frontal	kg	1425		
- swivelled	kg	1025		
Dump load (telescope extended) *2				
- frontal	kg	1770		
- swivelled	kg	1020		
Dump load (telescope extended)				
- frontal	kg	885		
- swivelled	kg	510		
Tear-out force acc. to ISO 8313	kN	44		

NOTE

*1 - ISO 14397: “Calculation of permissible payload”
*2 - ISO 8313: “Measurement of dump load”

12.2 Fork-lift attachment

- Dimensions acc. to ISO 7131/35

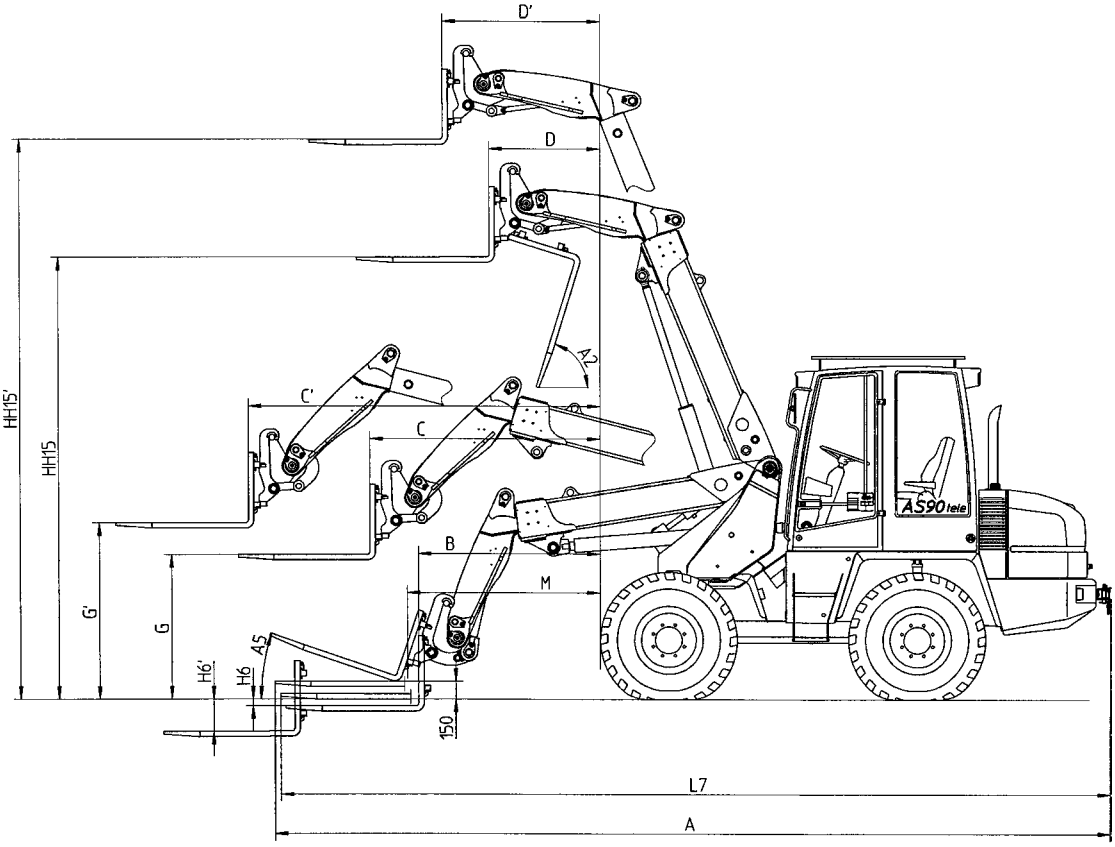

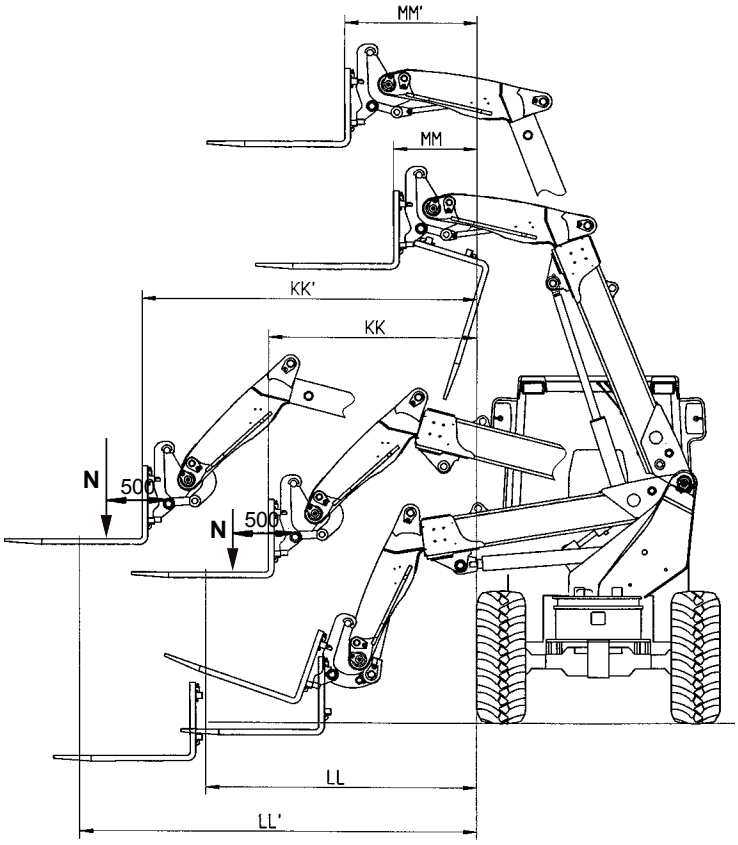

12.2 Fork-lift attachment

A	Total length	6910 mm
A2	Tip angle	72 °
A5	Tilt angle	20 °
B	Min. reach	1510 mm
C	Max. reach	1915 mm
C'	Max. reach	2930 mm
D	Reach at max. lifting height	930 mm
D'	Reach at max. lifting height	1310 mm
G	Free lift height at max. reach	1200 mm
G'	Free lift height at max. reach	1460 mm
H6	Depth of feed-in	55 mm
H6'	Depth of feed-in	265 mm
HH15	Free lift height at max. reach (upper tine edge)	3665 mm
HH15'	Free lift height at max. reach (upper tine edge)	4640 mm
KK	Max. reach	1655 mm
KK'	Max. reach	2675 mm
LL	Distance between tyre and payload	2155 mm
LL'	Distance between tyre and payload	3175 mm
L7	Total length	6880 mm
M	Reach (upper tine edge 300 mm)	1605 mm
MM	Reach at max. lifting height	665 mm
MM'	Reach at max. lifting height	1055 mm

NOTE

- The code letters given **without** inverted comma (e.g. **C**) are values with the telescope **retracted**.
- The code letters given **with** inverted comma (e.g. **C'**) are values with the telescope **extended**.

12.2 Fork-lift attachment

Tine length	1100 mm
Tine height	45 mm
Tine spacing (centre)	
- min.	216 mm
- max.	1054 mm
Dead weight	210 kg

Perm. payload N acc. to DIN 14397 **(telescope retracted)**

frontal	
- level ground (stability factor 1.25)	2135 kg
- uneven ground (stability factor 1.67)	1600 kg
swivelled	
- level ground (stability factor 1.25)	1595 kg
- uneven ground (stability factor 1.67)	1195 kg

Perm. payload N acc. to DIN 14397 **(telescope extended)**

frontal	
- level ground (stability factor 1.25)	1410 kg
- uneven ground (stability factor 1.67)	1055 kg
swivelled	
- level ground (stability factor 1.25)	900 kg
- uneven ground (stability factor 1.67)	675 kg

Perm. payload N acc. to DIN 8313 **(telescope retracted)**

frontal	
- level ground (stability factor 1.25)	1980 kg
- uneven ground (stability factor 1.67)	1485 kg
swivelled	
- level ground (stability factor 1.25)	1395 kg
- uneven ground (stability factor 1.67)	1045 kg

Perm. payload N acc. to DIN 8313 **(telescope extended)**

frontal	
- level ground (stability factor 1.25)	1335 kg
- uneven ground (stability factor 1.67)	1000 kg
swivelled	
- level ground (stability factor 1.25)	785 kg
- uneven ground (stability factor 1.67)	590 kg

Perm. payload N acc. to DIN 8313, **fork-lift attachment 300 mm above ground (telescope retracted)**

frontal	
- level ground (stability factor 1.25)	2190 kg
- uneven ground (stability factor 1.67)	1645 kg

Perm. payload N acc. to DIN 8313, **fork-lift attachment 300 mm above ground (telescope extended)**

frontal	
- level ground (stability factor 1.25)	1390 kg
- uneven ground (stability factor 1.67)	1045 kg

NOTE

- ISO 14397: “Calculation of permissible payload”
- Stability factor acc. to DIN EN 474-3

12.3 Lifting hook

- Dimensions acc. to ISO 7131/35

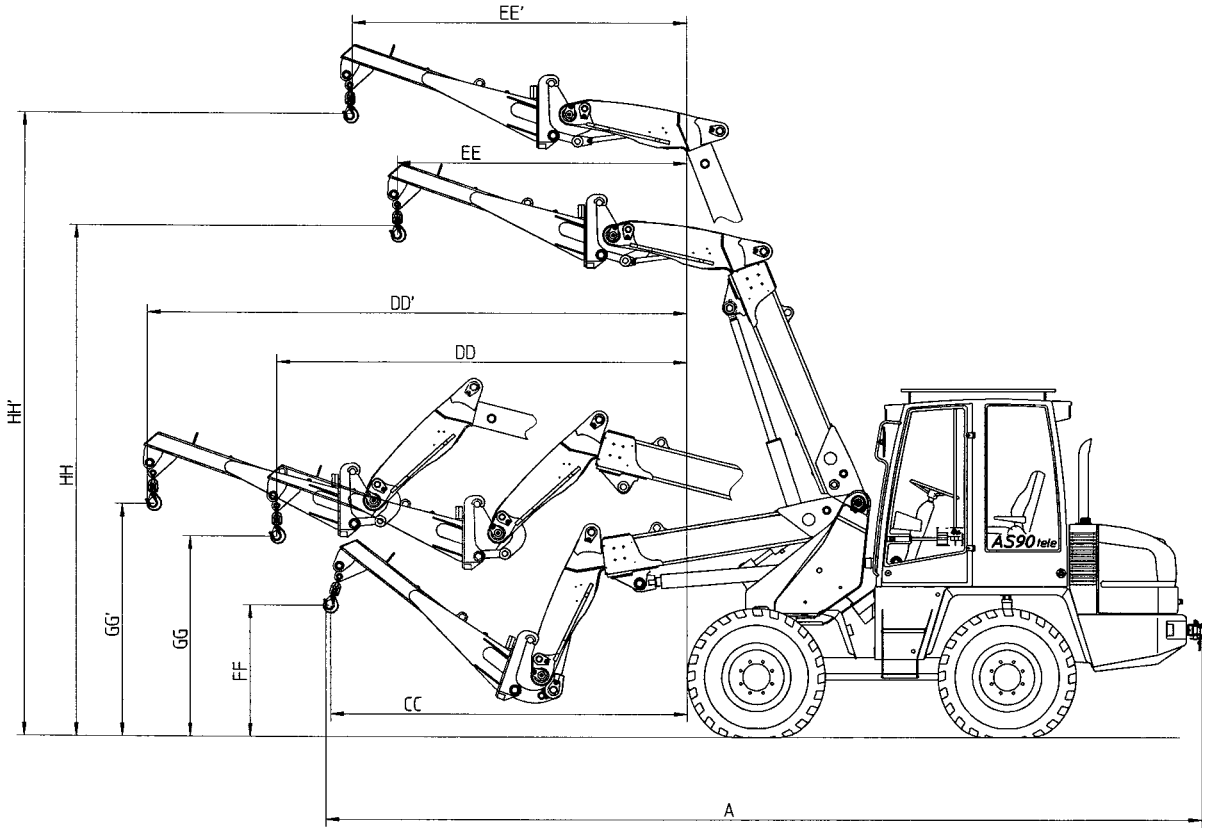

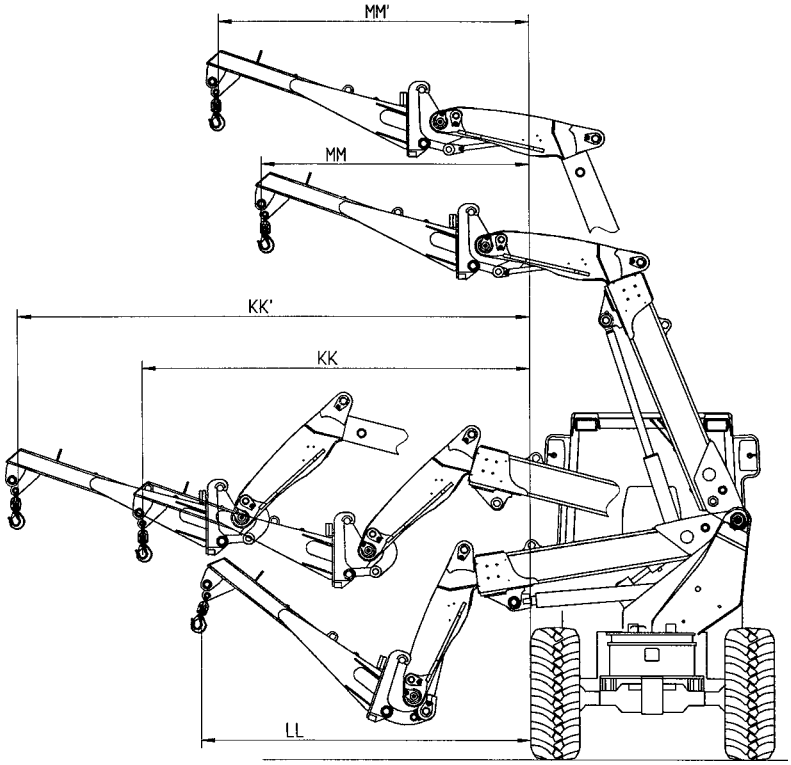

12.3 Lifting hook

Perm. payload acc. to DIN EN 474-3 (acc. to ISO 8313)

Max. outreach (stability factor 2)	(Telescope retracted)	(Telescope extended)
- frontal	1200 kg	600 kg
- swivelled	600 kg	370 kg

Dead weight	160 kg

A	Total length	7150 mm
CC	Min. reach	2910 mm
DD	Max. outreach	3350 mm
DD'	Max. outreach	4415 mm
EE	Reach at max. lifting height	2360 mm
EE'	Reach at max. lifting height	2730 mm
FF	Min. lifting height with tilted quick-change device	1075 mm
GG	Lifting height at max. outreach	1640 mm
GG'	Lifting height at max. outreach	1905 mm
HH	Max. lifting height	4180 mm
HH'	Max. lifting height	5100 mm
KK	Max. outreach	3095 mm
KK'	Max. outreach	4090 mm
LL	Min. outreach	2630 mm
MM	Max outreach at max. lifting height	2130 mm
MM'	Max outreach at max. lifting height	2470 mm

NOTE

- The code letters given **without** inverted comma (e.g. **D**) are values with the telescope **retracted**.
- The code letters given **with** inverted comma (e.g. **D'**) are values with the telescope **extended**.

Additional options, modifications, notes on inspection for loaders

13 Additional options, modifications, notes on inspection for loaders

13.1 Additional options

none

13.2 Modifications

none