Maintenance

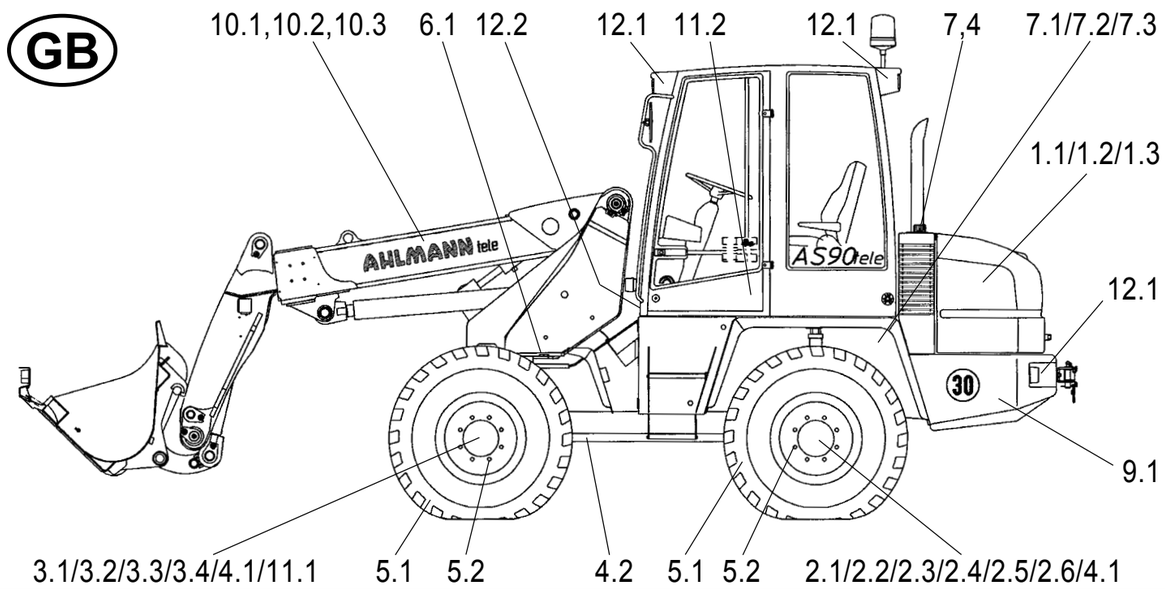

Item	Designation	Specification	Viscosity	Filling amount
* 1	Motor oil	MIL-L-2104 C = API-CD	acc. to manufacturer	ca. 10 l with oil filter
* 2.2	Transmission oil	MIL-L-2105 D = API-GL5-6	SAE 85 W 90	ca. 6,25 l
* 2.4	Transmission oil	MIL-L-2105 D = API-GL5-6	SAE 85 W 90	ca. 2 x 0.75 l
* 2.6	Transmission oil	MIL-L-2105 D = API-GL5-6	SAE 85 W 90	ca. 1.9 l (20 km/h) ca. 1.6 l (30 km/h)
* 3.2	Transmission oil with LS additive	MIL-L-2105 D = API-GL5-6-LS	SAE 85 W 90-LS	ca. 6.25 l
* 3.4	Transmission oil	MIL-L-2105 D = API-GL5-6	SAE 85 W 90	ca. 2 x 0.75 l
* 7.3	Hydraulic oil (4)	DIN 51524, HVLP 46	ISO VG 46, VI > 180	ca. 120 l
8	Grease	DIN 51825 - KPF 1/2 N-20		as required
9	Distilled water			as required
* 10	Mineral oil	DIN 51524, HVLP 46	ISO VG 46, VI > 180	as required

Key to symbols

△ First oil change / first filter replacement

▲ First check; eliminate any determined problems

○ Check; eliminate any determined problems

◇ Change

* The markings, filling and check plugs are binding

Refer to operating instructions

Caution
When carrying out maintenance work, heed the accident prevention regulations!

Lubrication points (indicated in red)

1. Lubricate bolts every 10 operating hours with grease DIN 51825 - KPF 1/2 N-20.
2. Lubricate glide points as required and always after cleaning, using grease DIN 51825 - KPF 1/2 N-20.

Oil lubrication points

3. Lubricate joints and toggle levers every 50 operating hours wih engine oil MIL-L-2104 C.

Optional features: Biodegradable hydraulic oil

4. Ester-based synthetic hydraulic oil. Viscosity class ISO VG 46 VI > 180

CAUTION Use only mineral oil for the service brake!

Every x operating hours 10	50	500	1500	Item	Maintenance points (max. permitted intervals or shorter (depending on use))
				1.	**Engine**
○	△			1.1	Maintenance according to manufacturer's regulations
				1.2	Dry air filter system
	○				Activate dust removal valve
	○				Check maintenance display
				1.3	Replace filter element if maintenance display is red
				2	**Rear axle with axle power shift gear or gear shift**
	○			2.1	Check oil level in axle gear (control screw)
		△	◇	2.2	Change oil in axle gear
	○			2.3	Check oil level in planetary gear (control screw)
		△	◇	2.4	Change oil in planetary gear
	○			2.5	Check oil level in distributiongear (control screw)
		△	◇	2.6	Change oil in distributiongear
				3	**Front axle**
	○			3.1	Check oil level in axle gear (control screw)
		△	◇	3.2	Change oil in axle gear
	○			3.3	Check oil level in planetary gear (control screw)
		△	◇	3.4	Change oil in planetary gear
				4	**Axles / cardan shaft(s)**
	▲	○		4.1	Check fastening of axles (385Nm)
	▲	○		4.2	Check fastening of cardan shaft(s) (32 Nm)
				5	**Wheels and tyres**
	○			5.1	Check air pressure
▲		○		5.2	Check fastening of wheel nuts (500 Nm)
				6	**Ball bearing slewing ring**
	▲	○		6.1	Check fastening (300 Nm)
				7	**Hydraulic system**
	△		◇	7.1	Replace filter inserts, observe electric control lamp
○				7.2	Oil level check (view glass)
			◇	7.3	Oil change
○				7.4	Check and clean hydraulic oil cooler
				8	**Lubrication points (indicated in red)**
				9	**Battery**
		○		9.1	Visual check
				10	**Arm**
			○	10.1	Wear of waer plates on the arm
			○	10.2	Overall condition of the arm
			○	10.3	Bearings and bearing rings
				11	**Brake system**
				11.1	Service and parking brake: Take function and visual check before starting work
○				11.2	Service brake: visually check compensation tank
		○		11.3	Parking brake: check and adjust if required
				12	**Lighting system / fresh air filter**
				12.1	Take function test before starting work
		○	◇	12.2	Check fresh air filter

8 Maintenance

8.1 Notes regarding maintenance

DANGER

- The engine must be turned off.
- For work to be carried out under the telescope arm:
  - the bucket must be emptied or the attachment must be relieved,
  - the telescope arm must be mechanically propped up [e.g. by inserting the telescope arm support (option)(1-2/arrow)],
  - the ball block valve for the working and auxiliary hydraulics (1-2/arrow) must be closed.
  - the swivel mechanism is to be blocked (1-4/arrow)
- The loader must be secured against rolling by applying the parking brake (4-10/4) and by setting the drive direction switch (4-10/12) to position “0“. In addition, wheel chocks must be placed on both sides of one of the two wheels of the front axle.

CAUTION

- Change the oil when the units are lukewarm.
- Perform maintenance work when the loader is on level ground and the telescope arm is in its lowest position.
- Replace damaged filter inserts and gaskets immediately.
- Clean grease nipples before lubricating.

NOTE

- For any necessary maintenance work refer to the maintenance plan.
- Damage which is traceable to non-observance of the maintenance plan is not covered by the warranty.
- The lubricants listed in the maintenance plan can be used at ambient temperatures ranging from **-15° C** to **+40° C**.

CAUTION

For ambient temperatures below 15° C, refer to the description in chapter 5.2.2 “Winter operation”.

NOTE

If a hose and/or pipe break occurs, the two lids of the hydraulic oil filter (8-20/arrows) must be loosened because the loader does not have a shut-off valve that could prevent large amounts of hydraulic oil from escaping.

8.2 Maintenance work

8.2.1 Engine oil level check

See the operating instructions for the engine.

8.2.2 Oil level check for axles

8.2.2.1 Rear axle » slow loader «

(1) Unscrew the plugs from the axle arch (8-1/arrow) and the intermediate gear (8-2/arrow).

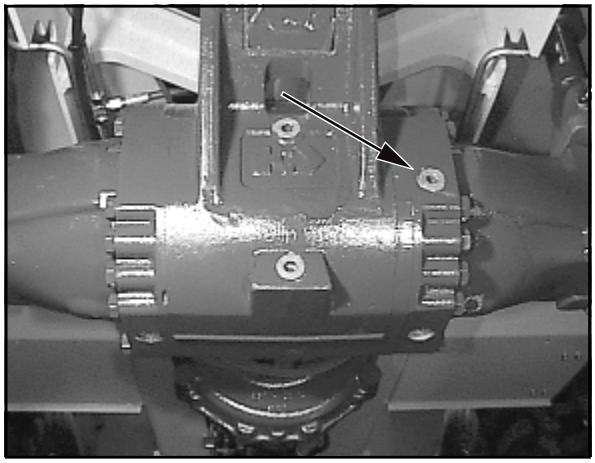

Figure 8-1

NOTE

- The axle arch and the intermediate gear do not have a common oil reservoir.
- The oil level must reach the plug bore.
- Collect any oil that escapes.

(2) Screw in the plug again.

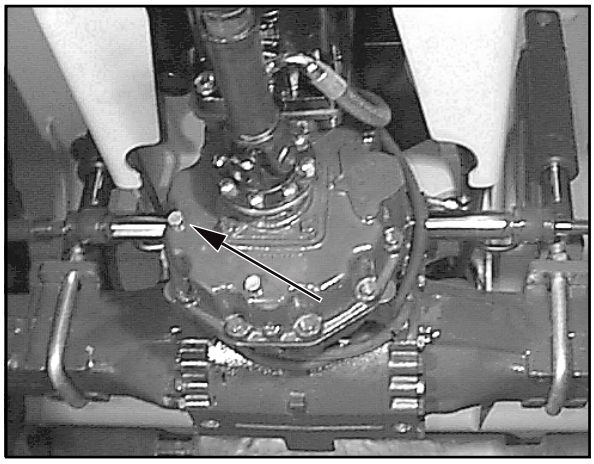

Figure 8-2

8.2.2.2 Rear axle » fast loader «

(1) Unscrew the plugs from the axle arch (8-3/arrow) and the intermediate gear (8-4/arrow).

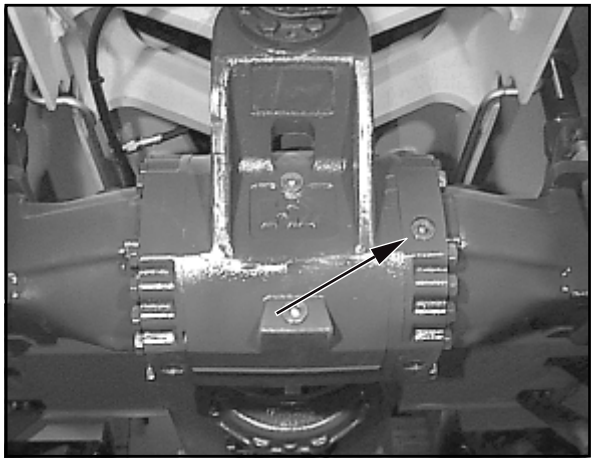

Figure 8-3

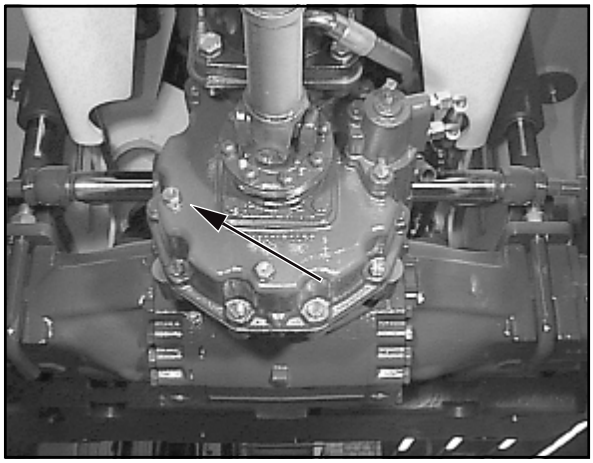

Figure 8-4

NOTE

- The axle arch and the distribution gear do not have a common oil reservoir.
- The oil level must reach the plug bores.
- Collect any oil that escapes.

(2) Screw in the plug again.

Figure 8-5

8.2.2.3 Planetary gear

(1) Move the loader until the marking line "OIL LEVEL" is horizontal and the plug is located above the top left of the marking line (8-5/arrow).

(2) Unscrew the plug.

NOTE

- The oil level must reach the plug bore.
- Collect any oil that escapes.

(3) Fit a new gasket and screw the plug back in.

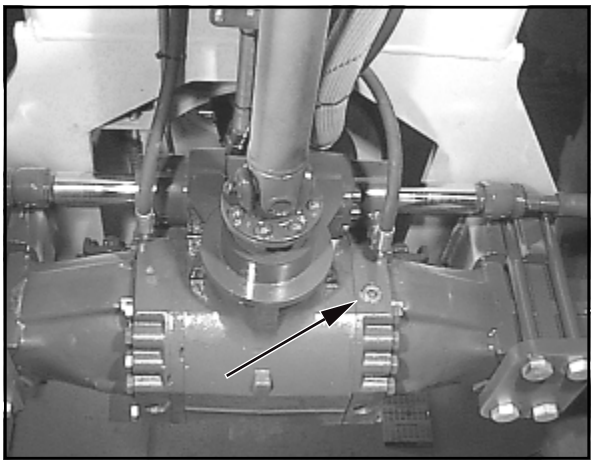

Figure 8-6

8.2.2.4 Front axle

(1) Unscrew the plug from the axle arch (8-6/arrow).

NOTE

- The oil level must reach the plug bore.
- Collect any oil that escapes.

(2) Screw in the plug again.

8.2.3 Oil level check in the hydraulic oil reservoir

(1) Park the loader in a level position.

(2) Move the telescope arm to its lowest position.

(3) Tilt the quick-change device, retract the telescope and move out the locking bolts using the hand lever for the auxiliary hydraulics (4-10/2).

(4) Open the motor hood.

(5) Check the oil level in the sight glass.

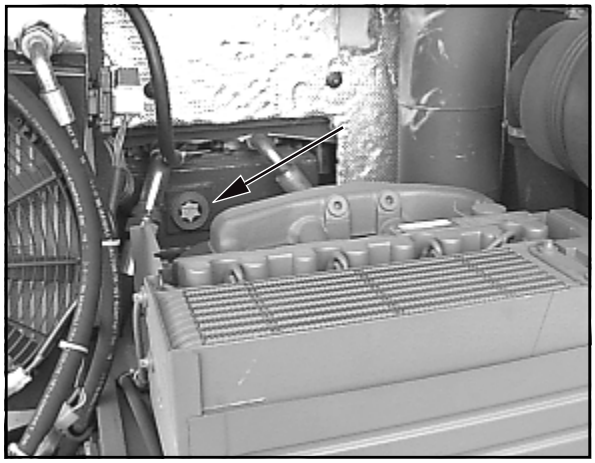

Figure 8-7

NOTE

The oil level must be visible in the upper quarter of the sight glass (8-7/arrow). If necessary, fill oil into the filler neck (8-18/arrow).

8.2.4 Oil change, engine

(1) Unscrew the maintenance flap from the motor protection (size 13) (8-8/arrow).

(2) Place a sufficiently large oil drain pan underneath.

(3) Open the motor hood.

(4) Unscrew the cover of the oil drain plug on the motor.

(5) Screw the drainage nozzle with hose from the tool box (4-1/12) to the oil drain plug.

(6) Remove the cover cap from the hose.

(7) Further procedures are to be found in the Engine Operating Manual.

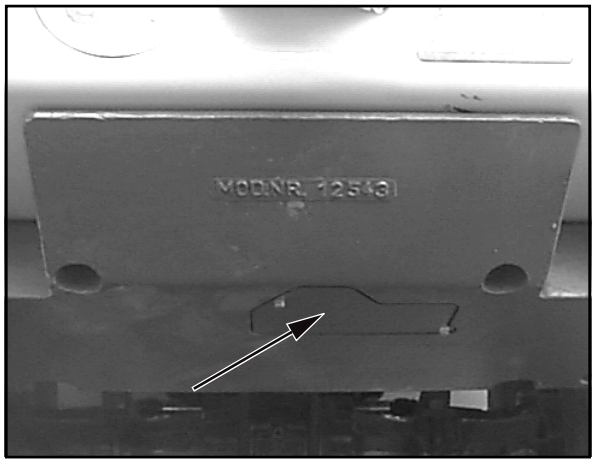

Figure 8-8

8.2.5 Oil change, axles

8.2.5.1 Rear axle » slow loader «

(1) Place a sufficiently large oil drain pan underneath.

(2) Unscrew the plugs from the axle arch (8-9/1, 8-9/2, 8-9/3 and 8-9/4) and the intermediate gear (8-10/1 and 8-10/2) and let the oil drain out.

CAUTION

Waste oil must be disposed of in such a way that it will not cause pollution!

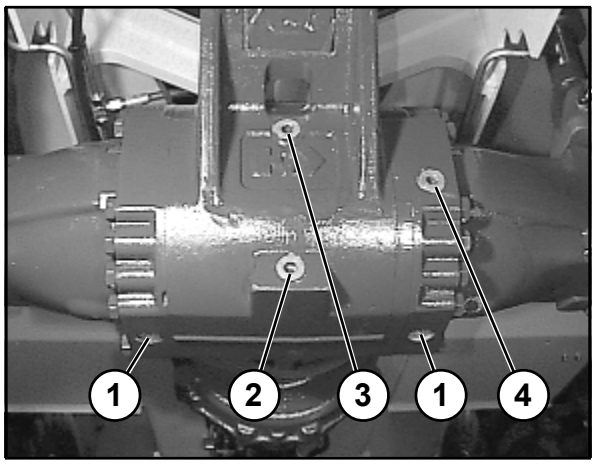

Figure 8-9

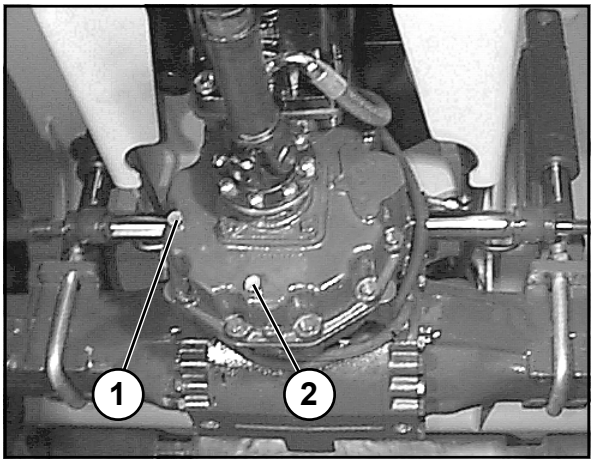

Figure 8-10

(3) Replace the plugs for the axle arch (8-9/1 and 8-9/2) and the intermediate gear (8-10/2).

(4) Fill oil into the plug bore of the axle arch (8-9/3) and the intermediate gear (8-10/1) until the oil level reaches the opening (8-9/4 or 8-10/1).

NOTE

- The axle arch and the intermediate gear do not have a common oil reservoir.
- Information about the quantity of oil is given in the maintenance plan (chapter 8.4).
- After a few minutes, when the oil level has lowered, top up the oil until the oil level reaches the marked level and remains stable.

(5) Replace the plugs for the axle arch (8-9/3 and 8-9/4) and the intermediate gear (8-10/1).

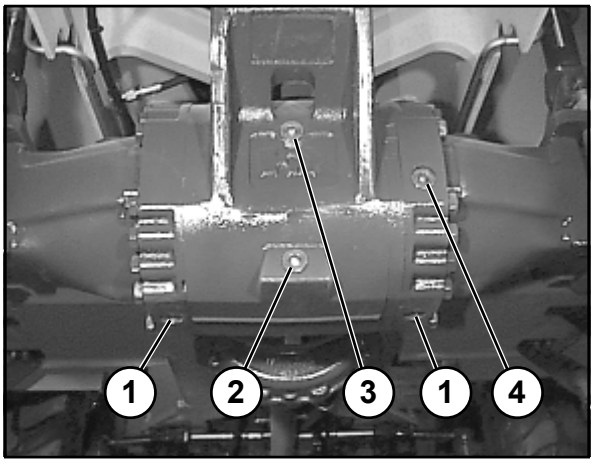

Figure 8-11

8.2.5.2 Rear axle » fast loader «

(1) Place a sufficiently large oil drain pan underneath.

(2) Remove the plugs from the axle arch (8-11/1, 8-11/2, 8-11/3 and 8-11/4) and the distribution gear (8-12/1 and 8-12/2) and drain the oil.

CAUTION

Waste oil must be disposed of in such a way that it will not cause pollution!

(3) Replace the plugs for the axle arch (8-11/1 and 8-11/2) and the distribution gear (8-12/2).

(4) Fill in oil via the plug hole in the axle arch (8-11/3) and the distribution gear (8-12/1) until the oil reaches the opening (8-11/4 or 8-12/1).

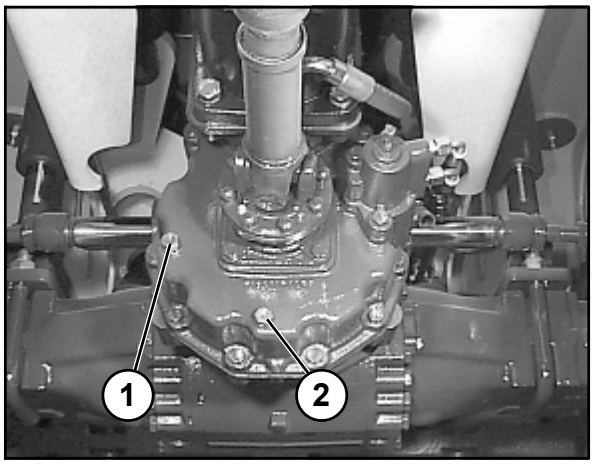

Figure 8-12

NOTE

- The axle arch and the intermediate gear do not have a common oil reservoir.
- Information about the quantity of oil is given in the maintenance plan (chapter 8.4).
- After a few minutes, when the oil level has lowered, top up the oil until the oil level reaches the marked level and remains stable.

(5) Replace the plugs for the axle arch (8-11/3 and 8-11/4) and the intermediate gear (8-12/1).

8.2.5.3 Planetary gear

(1) Move the loader so that the plug (8-13/arrow) is positioned at 6 o'clock.

(2) Place an oil drain vessel with a drain channel underneath the gear.

(3) Unscrew the drain plug and let the oil drain out.

CAUTION

Waste oil must be disposed of in such a way that it will not cause pollution!

Figure 8-13

(4) Move the loader until the marking line "OIL LEVEL" is horizontal and the plug is located above the top left of the marking line (8-14/arrow).

(5) Fill in oil via the plug bore until the oil level reaches the opening.

(6) Use a new gasket when screwing the plug back in.

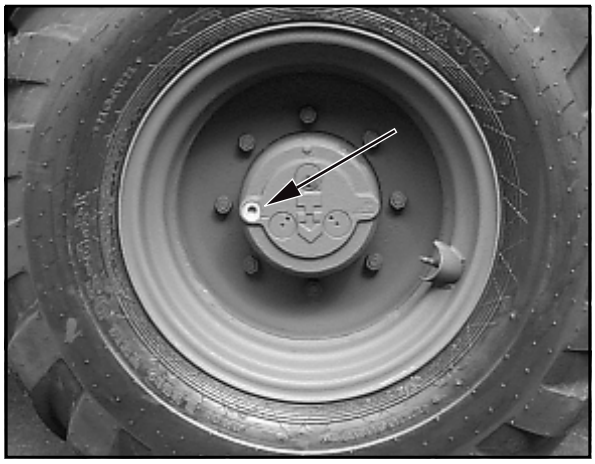

Figure 8-14

8.2.5.4 Front axle

(1) Place a sufficiently large oil drain pan underneath.

(2) Remove the plugs from the axle arch (8-15/1, 8-15/2, 8-15/3, 8-16/1 and 8-16/2) and drain the oil.

CAUTION

Waste oil must be disposed of in such a way that it will not cause pollution!

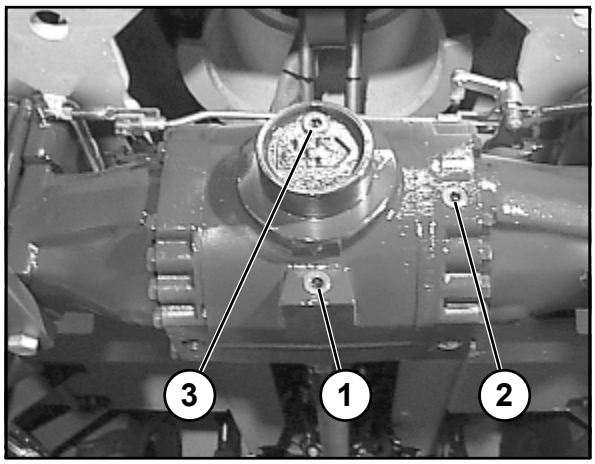

Figure 8-15

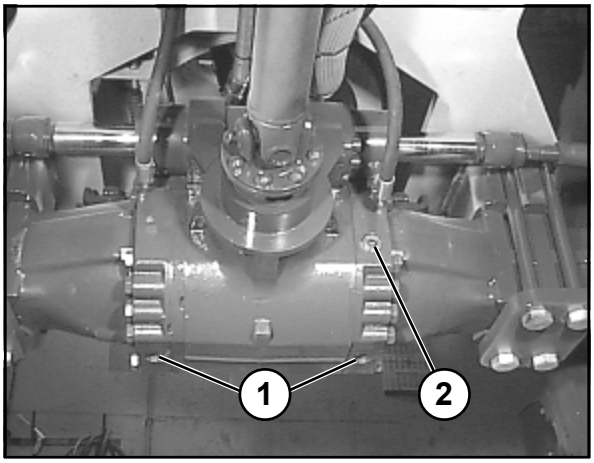

Figure 8-16

(3) Screw the plugs (8-15/1 and 8-16/1) back in.
(4) Fill in oil via the plug bore (8-15/3) until the oil level reaches the opening (8-15/2 or 8-16/2).

NOTE

- Information about the quantity of oil is given in the maintenance plan (chapter 8.4).
- After a few minutes, when the oil level has lowered, top up the oil until the oil level reaches the marked level and remains stable.

(5) Screw the plugs (8-15/2 and 8-15/3 and 8-16/2) back in.

8.2.6 Oil change, hydraulic system

(1) Have an oil pan ready (at least 140 l).
(2) Unscrew the covering flap of the oil drain plug (8-17/arrow).
(3) Screw the drainage nozzle with hose from the tool box (4-1/12) to the oil drain plug.
(4) Remove the cover cap from the hose.
(5) Drain the oil into the oil pan.

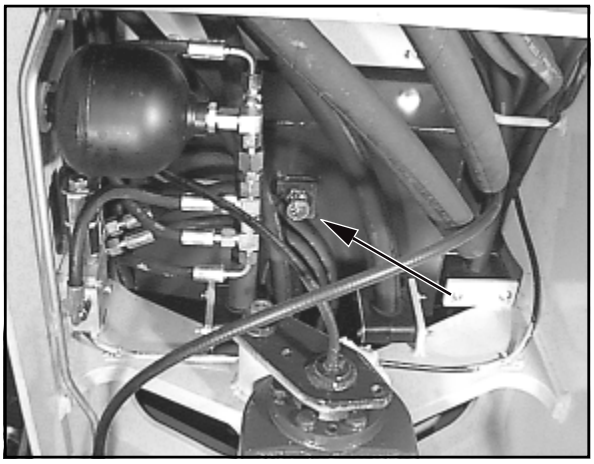

Figure 8-17

CAUTION

Waste oil must be disposed of in such a way that it will not cause pollution!

(6) Remove the nozzle with the hose and replace the cover cap on the hose.
(7) Screw the covering plate onto the oil drain plug.
(8) Change the hydraulic oil filter inserts (section 8.2.7).
(9) Fill oil into the filler neck (8-18/arrow).

CAUTION

For those loaders which are fitted to run with biodegradable hydraulic oil (ester-based synthetic hydraulic oil of viscosity class ISO VG 46 VI > 180) - (designation can be found on the hydraulic oil reservoir and on the dashboard), only this type of oil may be used for oil changes. Mineral and biodegradable hydraulic oils must **never** be mixed!
Biodegradable hydraulic oil must be changed every **1000 operating hours**.
Changing the oil type from mineral oil to biodegradable oil must be performed according to the VDMA 24 569 conversion guidelines.

Figure 8-18

CAUTION

The service brake must only be operated with mineral oil!

(10) Check the oil level at the sight glass (8-7/arrow).
(11) Close the filling nozzle.

8.2.7 Changing the hydraulic oil filter cartridges

CAUTION

Replace the filter cartridge according to the maintenance plan or when the clogging indicator lamp (4-11/25) lights up.

NOTE

The clogging indicator may light up prematurely after a cold start. It will go out when the hydraulic oil warms up.

(1) Move the seat to the frontmost position (5-9/2).

(2) Tilt the backrest of the seat completely forward (5-8/3).

(3) Fold back the insulation mats to the left and the right of the driver's seat, unscrew the four screws (size 13) (8-19/arrows) that fix the maintenance plate and remove the plate.

(4) Loosen the lids of the hydraulic oil filters (8-20/ arrows) and replace the filter cartridges by new ones.

CAUTION

Waste hydraulic oil filter cartridges must be disposed of in such a way that they will not cause pollution.

(5) Lock the lids of the hydraulic oil filters.

(6) Fasten the maintenance plate.

(7) Restore the individual seat position.

Figure 8-19

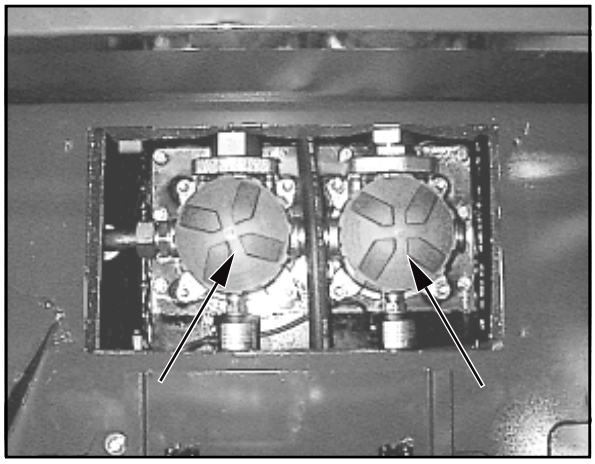

Figure 8-20

8.2.8 Maintaining/replacing the air filter

NOTE

Maintenance of the filter cartridge is necessary when either the red range is visible in the maintenance indicator (8-21/1) or after 12 months, whichever is sooner.

(1) Open the motor hood.

(2) Loosen the three spring-loaded catches on the air filter lid (8-21/2) and remove the air filter lid.

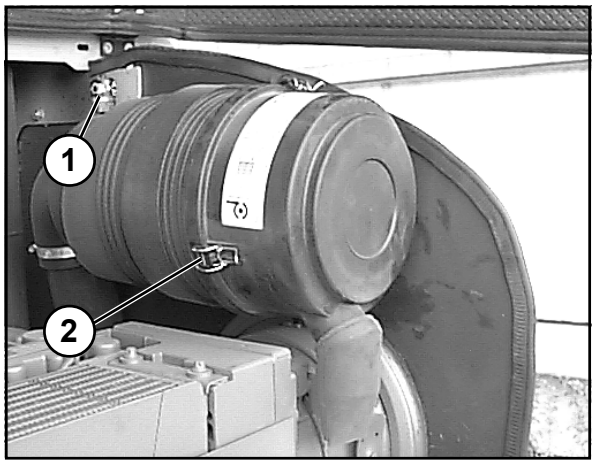

Figure 8-21

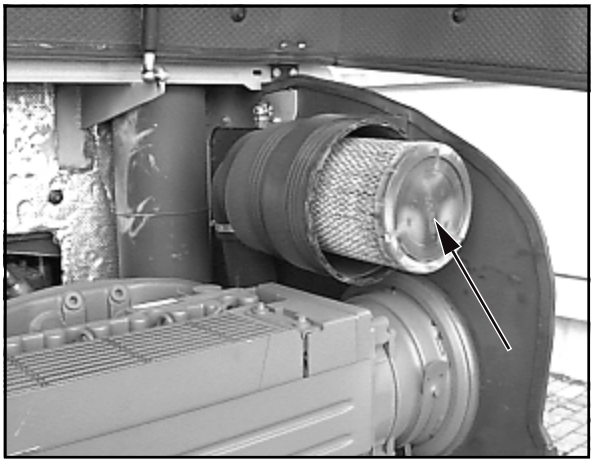

Figure 8-22

(3) Pull out the filter cartridge (8-22/arrow) by carefully turning it back and forth.
(4) Clean the filter cartridge.

CAUTION

- For cleaning, use a compressed air gun to which a pipe (angled at 90°) has been attached. The pipe must be sufficiently long to reach the bottom of the cartridge. Use dry compressed air of no more than 5 bar to blow out the cartridge by moving the pipe back and forth in the interior of the cartridge. Cleaning can be stopped when dust formation ceases.
- Do not use any petrol or hot fluids for cleaning.

(5) Use a hand-held lamp to check the cartridge paper and the rubber gasket of the filter cartridge for damage. If the cartridge or the gasket is damaged, replace the cartridge.
(6) Carefully insert the filter cartridge.
(7) Install the air filter lid on the filter housing in such a way that the direction arrow in the marking "**OBEN-TOP**" roughly points to half past one.

NOTE

The dust removal valve must be checked from time to time and cleaned if necessary.

(8) When the indicator field becomes red (8-21/1), push the reset button. The field becomes clear.

CAUTION

Check all connection pipes and hoses of the air filter system for damage before starting the engine.

8.2.9 Replacing the safety cartridge

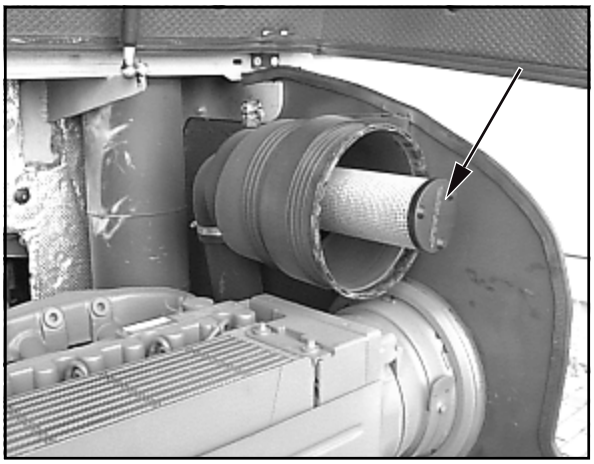

Figure 8-23

CAUTION

- The safety cartridge must not be cleaned.
- The safety cartridge must be replaced after the filter cartridge has been maintained/cleaned 5 times, but at the latest after two years.
- Make sure that no dirt or dust can enter the filter housing during replacement of the safety cartridge.

(1) Remove the filter cartridge (section 8.2.8).
(2) Pierce the seal of the safety cartridge (8-23/arrow) from the inside by using a screwdriver or similar tool and pull up both strips.
(3) Hold the safety cartridge by both strips and pull it out by carefully turning it back and forth. Replace the safety cartridge and the filter cartridge by new ones.
(4) The remaining installation is performed as described in section 8.2.8 (6)-(8).

8.2.10 Replacing the fuel filter

See the operating instructions for the engine.

8.2.11 Replacing the starter battery

NOTE

The starter battery is a maintenance-free part according to DIN 72311, section 7. It is located to the right in the motor compartment.

(1) Remove the main battery switch (4-10/7).
(2) Open the motor hood.
(3) Loosen and remove the fastening screw (size 17) (8-24/1) of the battery holder.
(4) Loosen and remove the connecting cables (8-24/2) from the batteries (size 13).

DANGER

Always remove the negative terminal first and then the positive terminal. Installation is in reverse order.

(5) Remove the battery and replace it.
(6) Apply grease to the terminals before fastening them.
(7) Installation is in reverse order.

DANGER

Make sure the fastenings are secure.

(8) Close the motor hood.

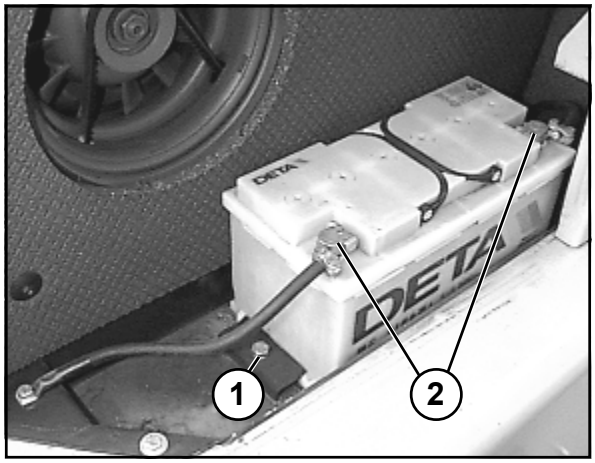

Figure 8-24

8.2.12 Maintaining/replacing the fresh air filter

(1) Lift and mechanically prop up the telescope arm [e.g. by inserting the telescope arm support (option) (1-1/ arrow)] and lower the telescope arm until it rests on the telescope arm support and swivel all the way to the left or right.
(2) Loosen the four fastening screws (size 10) (8-25/ arrows) of the heater cover and remove the cover.
(3) Remove the filter elements (8-26/arrows) and clean them with compressed air.

CAUTION

Do not use any petrol, hot fluids or industrial compressed air for cleaning.

(4) Check the filter elements for damage.

NOTE

The filter elements must be replaced when they are damaged or every **1500 operating hours**.

(5) Insert the filter elements and install the heater cover.

Figure 8-25

Figure 8-26

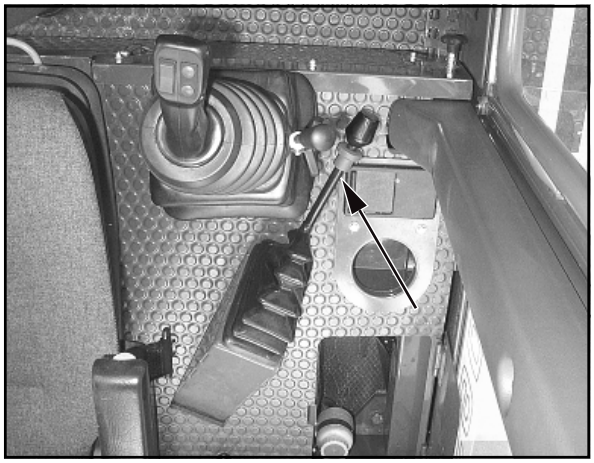

Figure 8-27

8.2.13 Checking/adjusting the parking brake play

DANGER

- All work on the brake system must be carried out by authorised personnel only.
- Oil loss (leaks) in the brake system must be immediately reported to authorized personnel.

(1) Check the brake's hydraulic oil level (4-10/8) and top up if necessary.

(2) Pull the parking brake lever (8-27/arrow) and release it again (lowest position).

CAUTION

The parking brake should become effective on the third catch.

If the path the parking brake lever must travel before the parking brake becomes effective is significantly longer, the following work must be carried out:

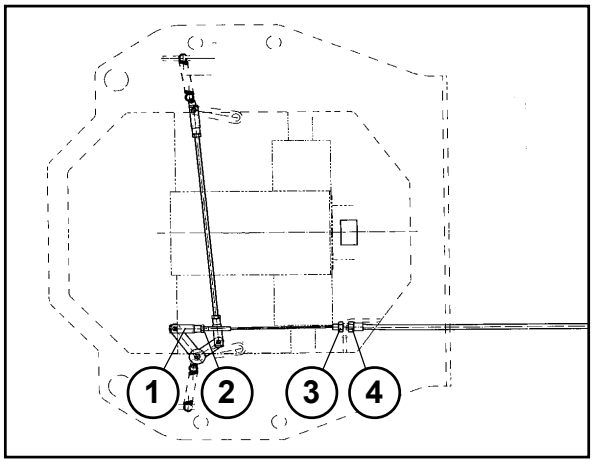

Figure 8-28

NOTE

Figure 8-28 shows a top view of the front axle/chassis area.

1st possibility of an adjustment:
(3) Loosen the adjusting screw on the cable (8-28/3) from the holder and turn it until the visible end of the thread is reached.

(4) Tighten the adjusting screw (8-28/4) until it touches the holder.

2nd possibility of an adjustment:
(5) Loosen the counter nut (8-28/2) at the steering head (8-28/1).

(6) Unhook the steering head and turn it in clockwise direction.

(7) Hook the steering head in again.

(8) Tighten the counter nut again.

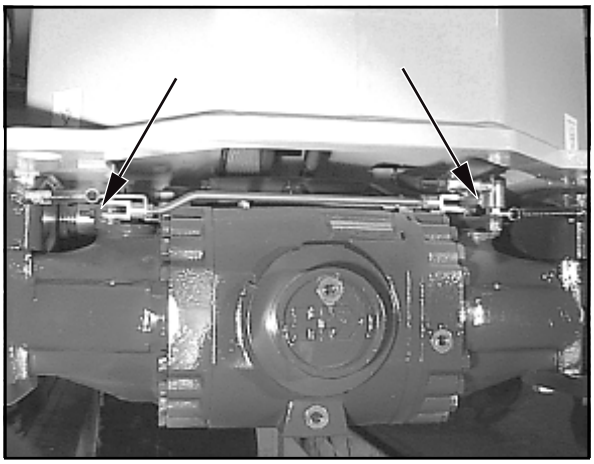

Figure 8-29

CAUTION

- While adjusting the leverage, make sure to check from time to time whether or not the parking brake becomes effective on the 3rd catch.
- The parallel leverage must make contact with the abutments (8-29/arrows) when the parking brake is released.

(9) Perform a function check.

8.3 Grease/oil lubrication points

- Item 8 of the maintenance plan.
- Marked in red on the loader.

8.3.1 Rear axle pivot bolts (8-30/arrows)

CAUTION

- The rear axle pivot bolt must be lubricated **every 50 operating hours**.
- Release the rear axle from load before lubricating the rear axle pivot bolts.

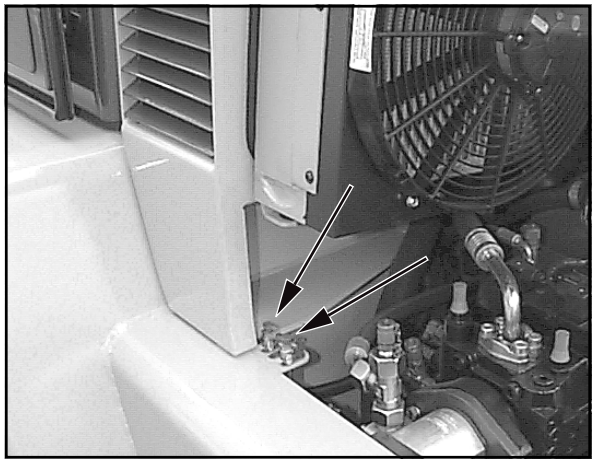

Figure 8-30

8.3.2 Rear axle (8-31/arrows)

CAUTION

The spindle bolts must be lubricated every **50 operating hours**.

NOTE

Lubricate the top and the bottom of the axle spindle bolts on both sides of the axle.

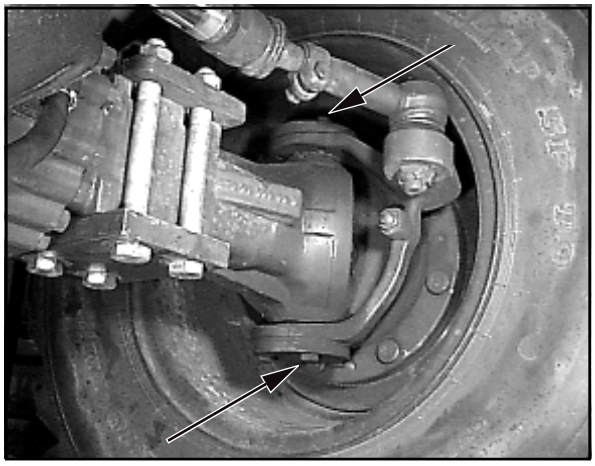

Figure 8-31

8.3.3 Front axle (8-32/arrows)

CAUTION

The spindle bolts must be lubricated every **50 operating hours**.

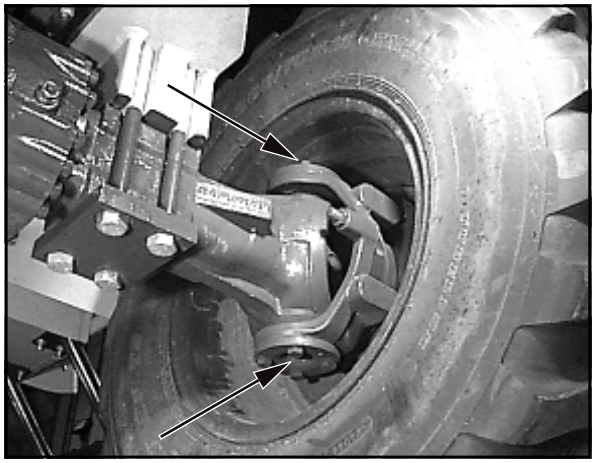

Figure 8-32

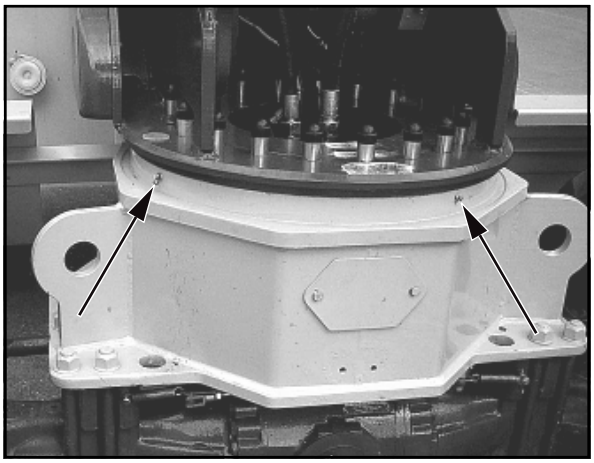

Figure 8-33

8.3.4 Ball bearing ring

The grease filling is to avoid friction, and to provide sealing and protection against corrosion. Therefore, the bearing must be lubricated **every 10 operating hours** until grease becomes visible on the outside. When lubricating the ball bearing ring, swivel the telescope arm by 20° at a time. Then lubricate all four grease nipples (8-33/arrows) in each position. It is absolutely necessary to lubricate the machine before and after a longer period of inactivity.

DANGER

- Before you start lubricating, mechanically support the telescope arm [e.g. by inserting the bucket arm support (optional) (1-1/arrow)], apply the parking brake (4-10/4) and set the drive direction switch (4-10/12) to the "0" position.
- **During** swivelling, no-one may be present in the swivel area of the telescope arm.

Figure 8-34

8.3.5 Wear liners on the telescope arm

NOTE

Lubricate the wear liners on the telescope arm every **10 operating hours** during the first **50 operating hours**, then after **250 operating hours**.

(1) Fully extend the telescope (4-10/11).
(2) Use a brush to apply grease on all four sides of the telescope (8-34/arrows).
(3) Retract and extend the telescope several times to evenly distribute the grease.
(4) Remove superfluous grease.

CAUTION

Use a higher grade multi-purpose grease in dusty environments.

Figure 8-35

8.3.6 Telescope arm

NOTE

The lubricating points of the telescope arm must be lubricated **every 50 operating hours**.

CAUTION

Grease every **10 operating hours** or at daily intervals in case of severe operating conditions, in dusty or wet environments.

- Swivel unit/telescope arm (8-35/arrow)

- Swivel unit/telescope arm (8-36/arrow)

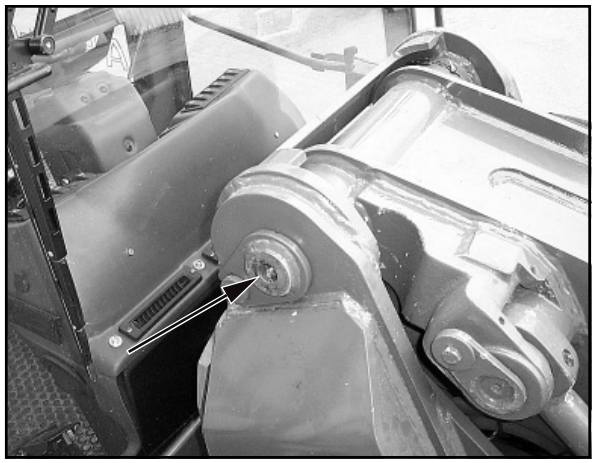

Figure 8-36

- Compensation cylinder bolt, plunger side (8-37/arrow)

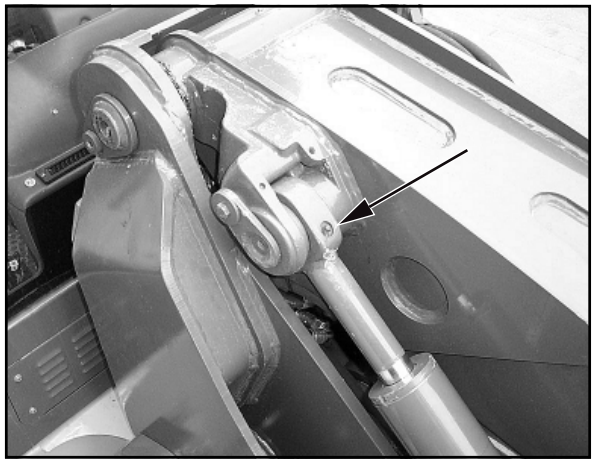

Figure 8-37

- Tip cylinder bolt, bottom side (8-38/arrow)

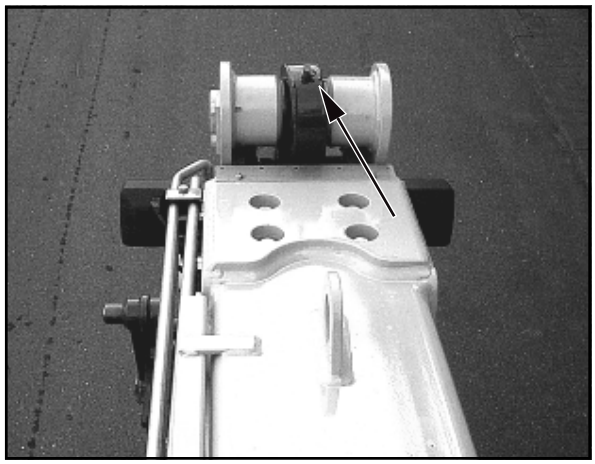

Figure 8-38

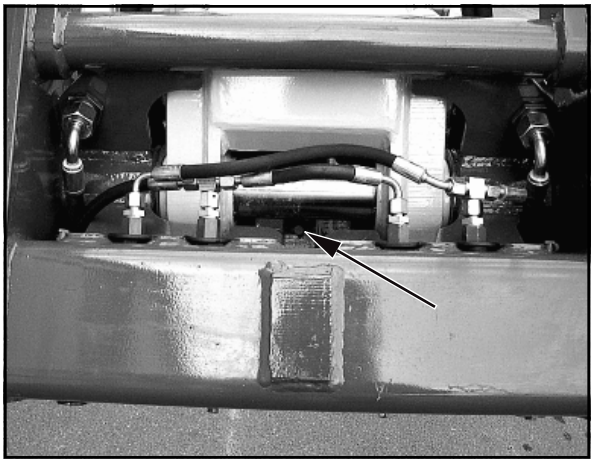

Figure 8-39

- Tip cylinder bolt, plunger side (8-39/arrow)

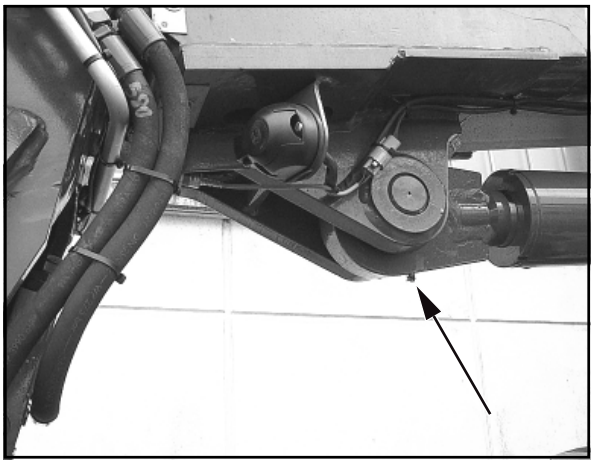

Figure 8-40

- Lift cylinder bolt, plunger side (8-40/arrow)

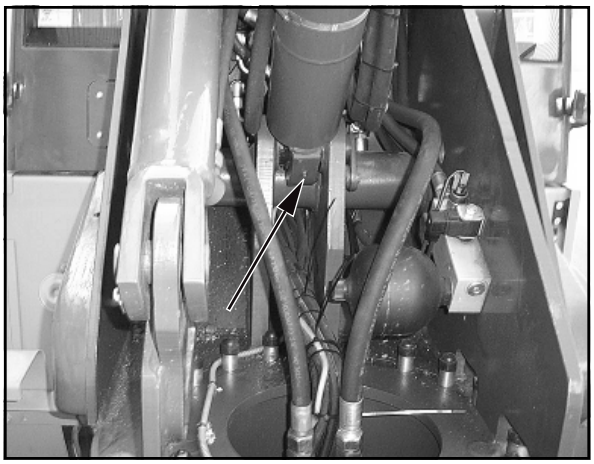

Figure 8-41

- Lift cylinder bolt, bottom side (8-41/arrow)

- Pivot arm bolt (8-42/1)
- Quick-change device bolt (8-42/2)
- Quick-change device release bolt (8-42/3)
- Pivot/pivot rod bolt (8-42/4)

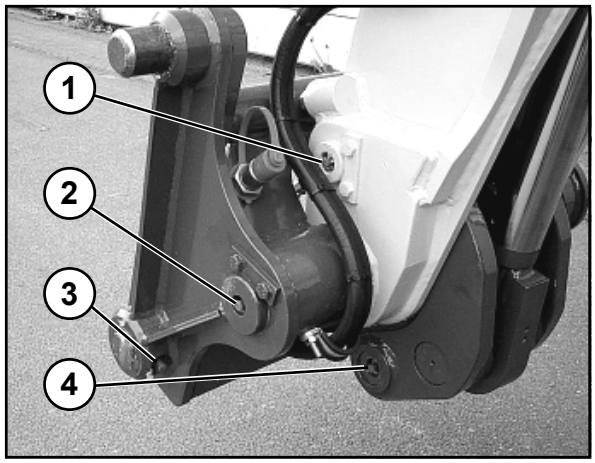

Figure 8-42

- Pivot arm bolt (8-43/1)
- Quick-change device bolt (8-43/2)
- Quick-change device release bolt (8-43/3)
- Pivot/pivot rod bolt (8-43/4)

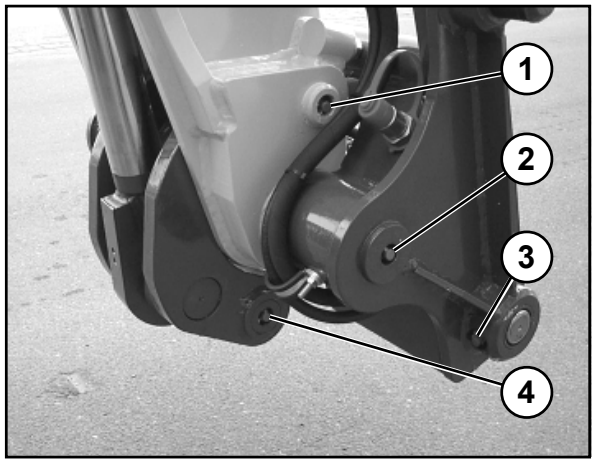

Figure 8-43

- Pivot rod bolt (8-44/arrows)

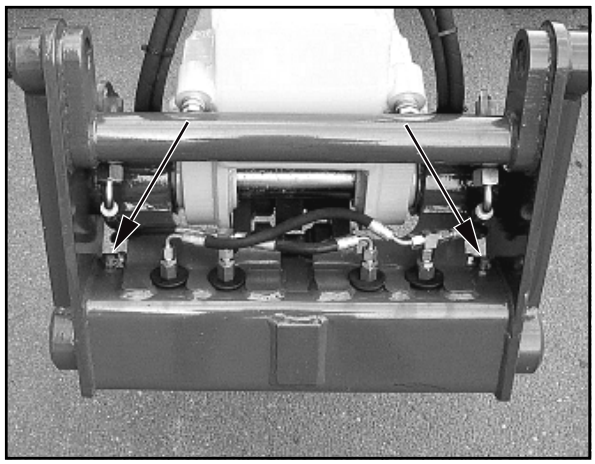
Figure 8-44

Figure 8-45

8.3.7 Driver's cabin door (8-45/arrows)

CAUTION

The hinges of the driver's cabin doors must be lubricated **every 50 operating hours**.

NOTE

Lubricate the hinges on both doors of the driver's cabin.

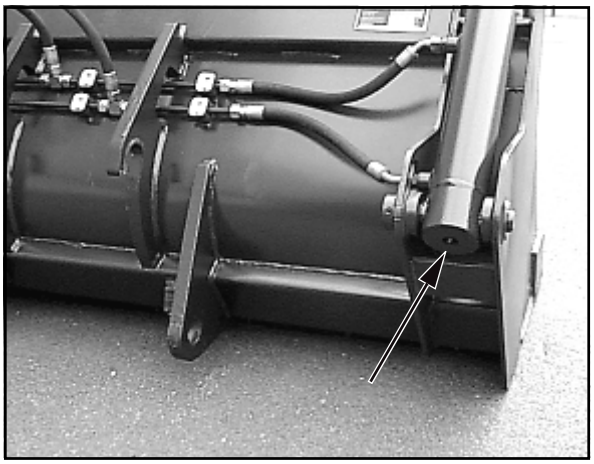

Figure 8-46

8.3.8 Multi-purpose bucket

CAUTION

The bearing bolts of the multi-purpose bucket must be lubricated **every 10 operating hours**.

NOTE

- The bolt (8-46/arrow) must be lubricated on both sides of the multi-purpose bucket.

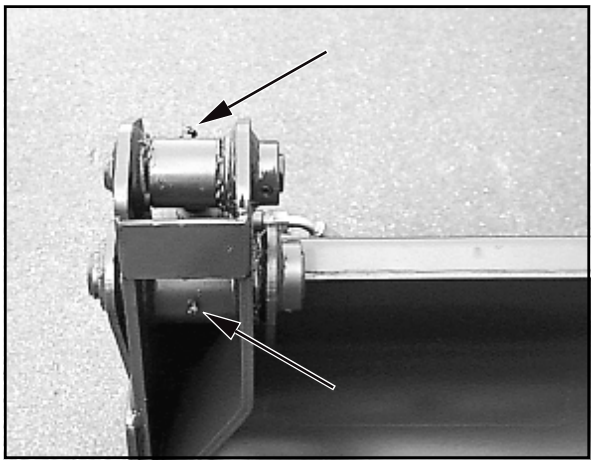

Figure 8-47

- The bolts (8-47/arrows) must be lubricated on both sides of the multi-purpose bucket.

8.3.9 Oil lubrication points

8.3.9.1 Parking brake

CAUTION

Use engine oil to lubricate the joints and pivot levers **every 50 operating hours** (8-48/arrows).

NOTE

Figure 8-48 shows a top view of the front axle/chassis area.

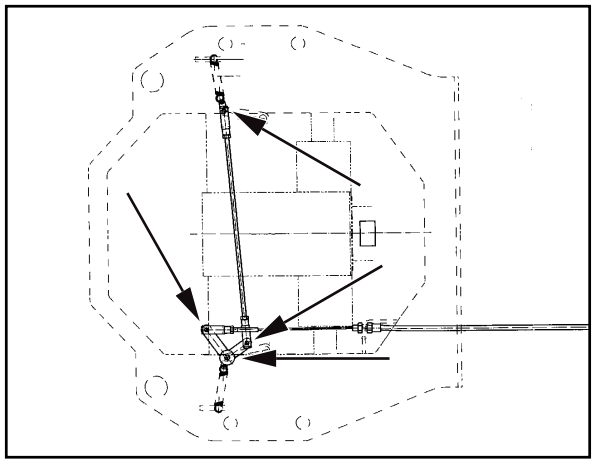

Figure 8-48

8.3.9.2 Supporting valve actuator (8-49/arrow)

CAUTION

The leverage of the supporting valve actuator must be lubricated with engine oil **every 50 operating hours**.

NOTE

Lubricate only the visible surface of the spring housing piston rod.

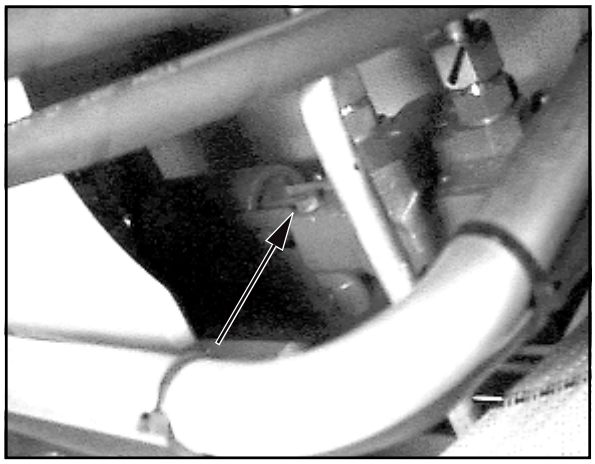

Figure 8-49